# Plug-in Electric Vehicle (PEV) Standards, Upcoming PEVs/Features, Charging System Overview

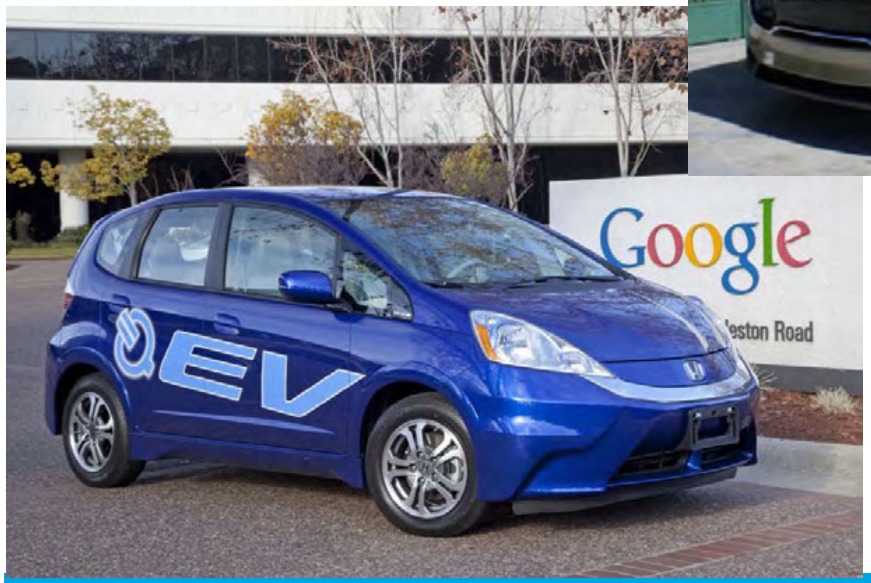

Electric Vehicle Winter 2012 Quarterly Discussion Webinar
February 27, 2012

**Theodore Bohn**

Principle Engineer
Argonne National Laboratory
Tbohn@anl.gov

# Overview

- Basics of Electricity Delivery (generation, transmission, distribution, and 'last 100 feet distribution issues')
- 2013 PEVs: Ford Focus PEV, Honda Fit, Chevy Spark, BMW 1-Series Active-E, and Tesla Model S
- Basics of PEV charging; AC on-board vs DC off-board
- Status of Plug-in Electric Vehicle (PEV) standards
  - Timeline of Charging Standards/publication
  - DC fast charging, charging rate/times (miles/charging hour), cost of infrastructure, such as transformer/losses
- CPUC Sub-metering protocol/EUMD (use cases)

**AUTHOR'S DISCLAIMER:** Many of the images and graphics used in this presentation have been obtained from other author's presentations. They are used here for informational purposes only and do not contain sufficient annotations to attribute them to proper sources. Use of these materials are appreciated by the respective owners of these materials in this webinar presentation.

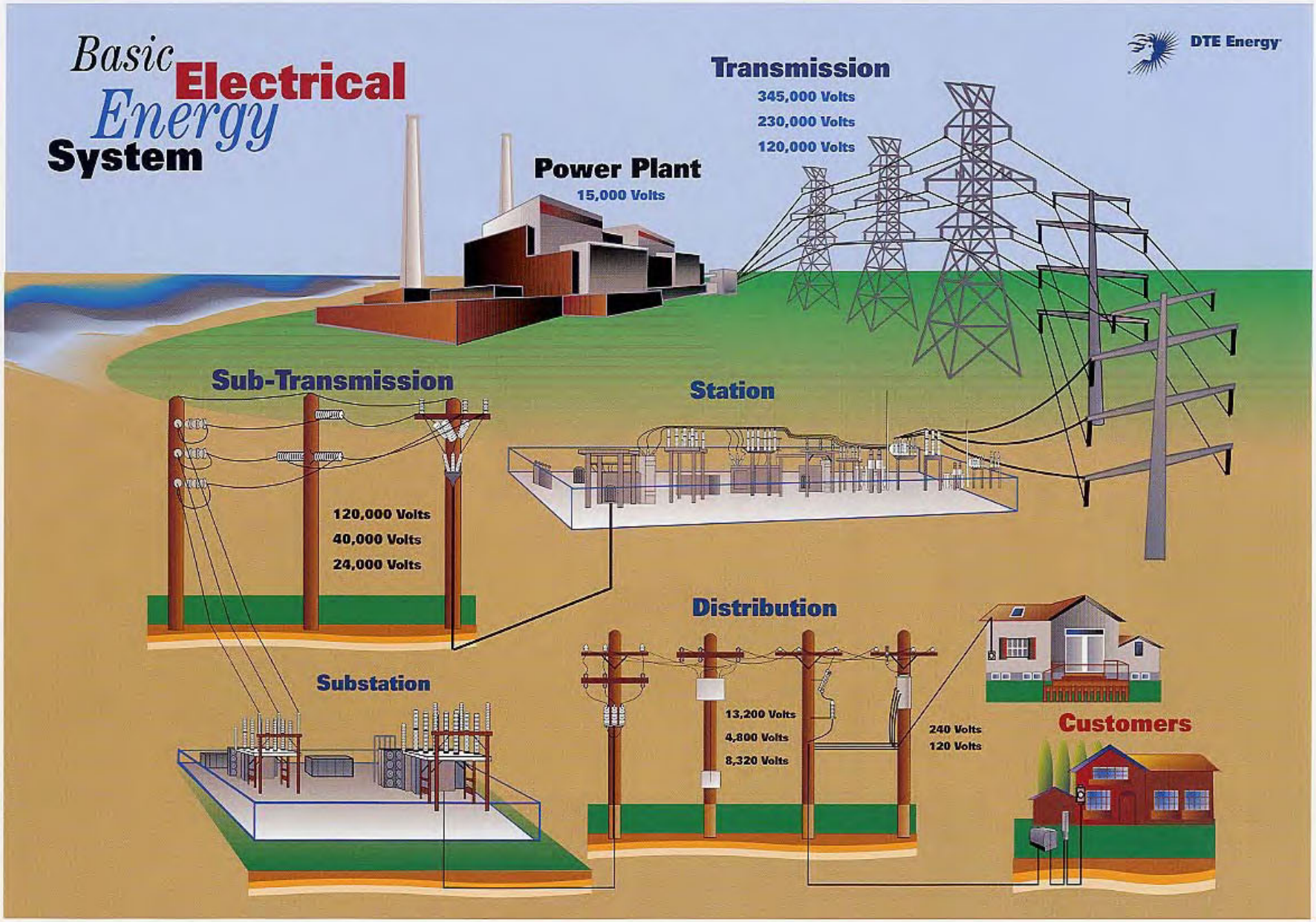
Basic Electrical Energy System
DTE Energy
Transmission
345,000 Volts
230,000 Volts
120,000 Volts
Power Plant
15,000 Volts
Sub-Transmission
120,000 Volts
40,000 Volts
24,000 Volts
Station
Distribution
Substation
13,200 Volts
4,800 Volts
8,320 Volts
240 Volts
120 Volts
Customers

# Unique Charging Needed for Each Vehicle Type

– **Plug in Hybrid Electric Vehicle (PHEV)**
  - Very limited electric range – small battery 5-10 kWhr
  - Charge power 1-3 kW

– **Extended Range Electric Vehicle (EREV)**
  - Increased electric range – medium battery 10-20 kWhr
  - Charge power up to 6 kW

– **Battery Electric Vehicle (BEV)**
  - All electric range – large battery >20kWhr
  - Charge power > 6 kW

# Relative Annual PEV Energy Usage {~2500kWhr/year or $275/year; ~$23/month}

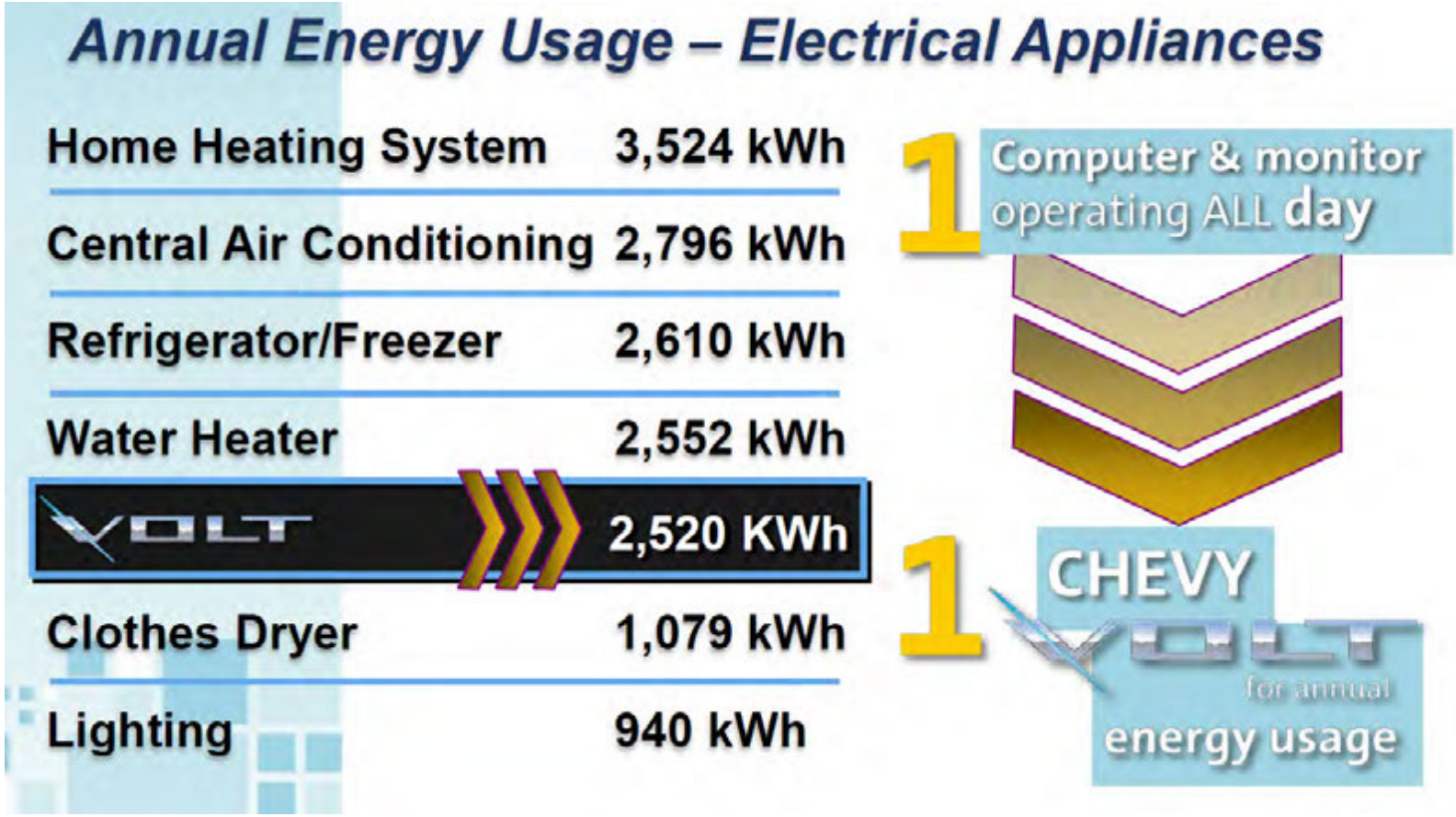

# How fast can a PEV be charge? (It depends)

The SAE DC charging standards current limits are most relevant. Delivered charging power is limited by vehicle's battery voltage- typically less than 400vdc.

SAE Level 1 DC limit is **80A** at up to 450vdc
SAE Level 2 DC limit is **200A** at up to 450vdc
SAE Level 3 DC limit is **400A** at up to 600vdc

The miles per minute of charge rate is tied to the size of the vehicle. Using simple math of 4 miles/kWhr, and a nominal battery voltage of 400v,  results in the following:

# How fast can a PEV be charge? (It depends)

- Level 1 J1772-DC= 80*400=32kW*4=132 miles per hour of charging, or 132/60 minutes= **2.2 miles/minute**

- Level 2 J1772-DC= 200*400=80kW*4=320 miles per hour of charging, or 320/60 minutes= **5.33 miles/minute**

- Level 3 J1772-DC= 400*400=160kW*4=640 miles per hour of charging, or 640/60 minutes= **10.66 miles/minute**

The broad answer is "It depends", and above are some examples of the typical parameters (4 miles/kWhr, ~400vdc battery).

# DC Charging Costs- trend toward <$10k for 50kW charging station, plus installation)

- Rated input 49kW 3- AC200V
  Output voltage Maximum DC500V
  Output current Maximum DC125A
  Connector to feed power to the EV JEVS G 105-1993

- Height/width/depth (mm) 1,840 x 380 x 665

- Priced below $10,000 (currently $20k) and set to go on sale in November, Nissan's newly-developed quick-charge unit takes up significantly less space than most competing [sic] ‘Level 3’ chargers.
- Nissan aims to sell **5,000 of the compact quick chargers** by March of 2016 to contribute to the ongoing development of Japan's plug-in vehicle infrastructure

# DC Charging Stations

- Currently only Nissan Leaf and Mitsubishi iMIEV have DC charging inlets (50kW)- (previously ~$900 option, now std.)
- SAE/IEC combination DC-AC charging standards are coming in 2012- vehicles 2014?

- 50kW=50/3=12.6kWhr-> $1.26 of electricity at $0.10/kWhr;
- Including service fee $20/12.6kWhr=$1.59/kWhr)

Blink

Coulomb-Acker Wade

Nissan

Epyon- Holland,

Aerovironment

All of the above use the JEVS105-1993 (JARI) DC coupler

**Others include Eaton, Efacec, Delta Products, Fuji Electronics, DBT, etc**

# NAIAS 2012- New/Currently Available PEVs

- $39995, 100 mile range, 23kWhr battery, 6kW on-board charger (limited distribution markets/states for 2012- 10,000 unit run)

# 2012 Focus EV- Interesting BEV/ICE Maintenance Comparison

- Focus electric vehicles may save $450/7.5 hours on **15 oil changes**, during the projected 10-year, 150,000-mile (241,400-km) life of the vehicle.
- Eliminated Items: **5 air filters** ($24.95 ea), 2 cooling system flushes ($109 ea), 1 drive belt ($130 ea), 1 transmission service ($179ea), 1 spark plug change ($69.95 ea)
- Still need to maintain proper tire pressure/rotation/replacement and replacing windshield-wiper blades.

- The only EV-exclusive maintenance item is a Ford-recommended lithium-ion battery pack's cooling system flush at 100,000 miles (161,000 km).

# Honda Fit PEV

- $36k, $399/month lease, 75-100 mile range, 95kW motor, 20kWhr battery, 3hr/6kW on-board charger (limited distribution markets/states for 2012-2013, Google fleet today)

# Chevy Spark PEV

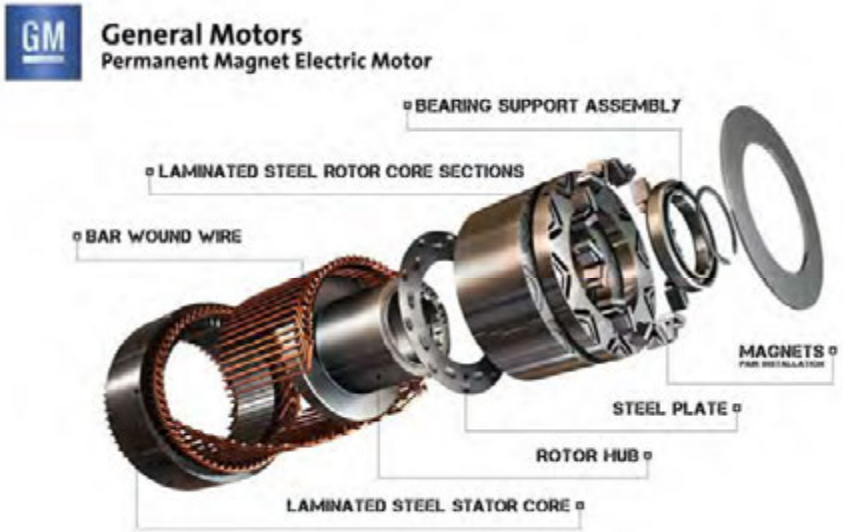


- Details TBD- A123 batteries, 2014 production- similar to Fit

# BMW 1-Series Active-E PEV

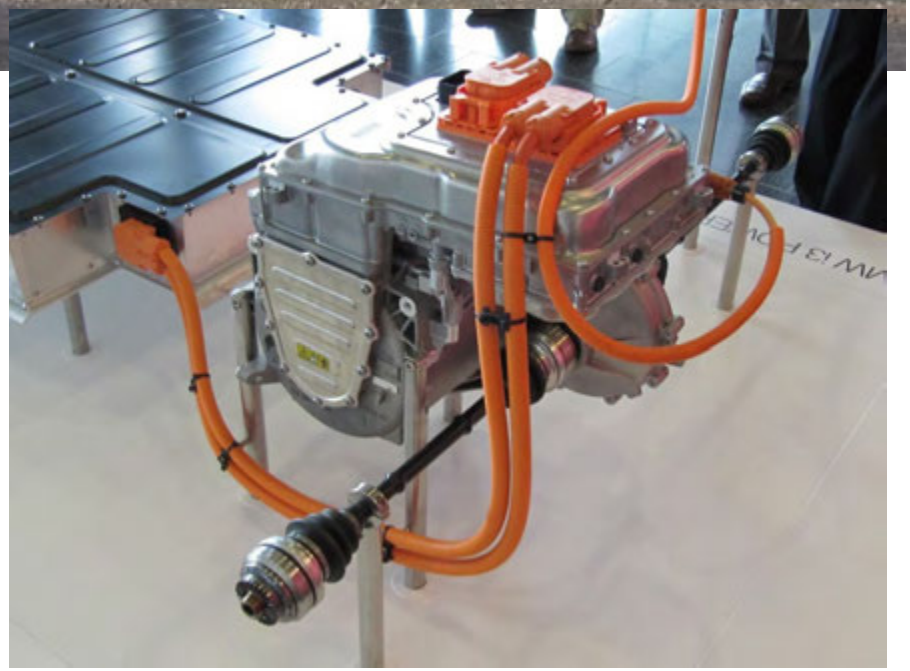

- **Vehicle type:** Rear-wheel-drive, 4-passenger, electric vehicle
- **Electric motor:** Synchronous
- **Power:** 170 hp (125 kW)
- **Torque from idle:** 184 lb.-ft. (249 Nm)
- **Top speed:** 90 mph (145 km/h)
- **Overall length:** 172 ins. (437 cm)
- **Wheelbase:** 104.7 ins. (266 cm)
- **Battery capacity:** 32 kWh
- **Battery system weight:** 992 lbs. (450 kg)
- **Curb weight:** 4,001 lbs. (1,815 kg)
- **Weight distribution:** 49/51 Front/Rear
- **2-year lease price:** $2,250 down, $499 month

# ‘12 Model X- Communication Innovation (more than one “Model X” announced in ’12....)

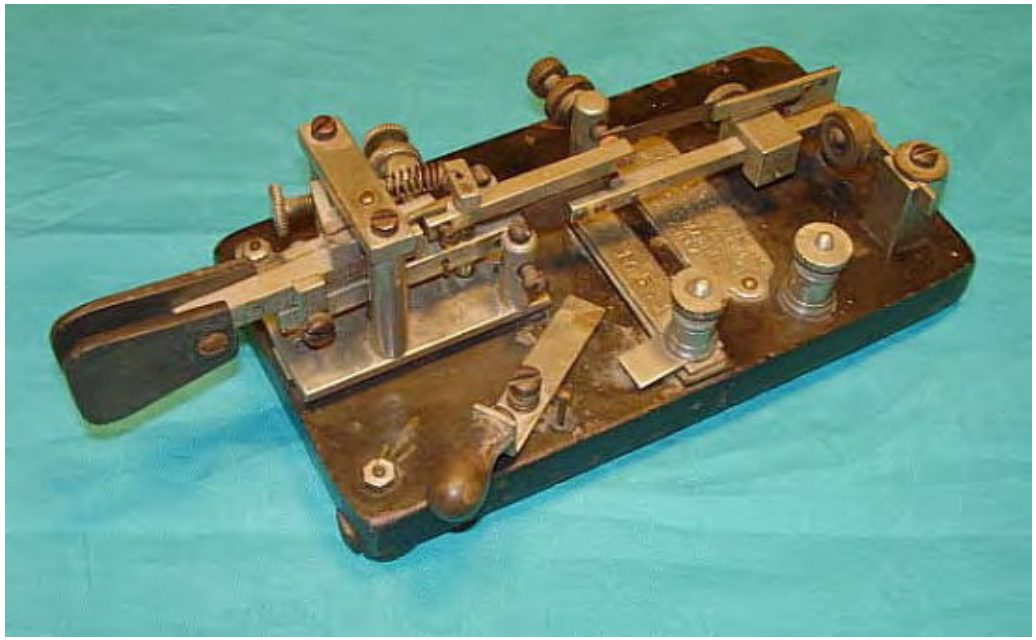

In 1911, Vibroplex introduced the Model X (right). It was the third style of "bug" offered and its design objective was to eliminate the separate dot and dash contacts. The Model X was based on the later of two patents from 1911 and achieves the goal of a single contact "bug." The Model "X" was produced up to the mid-twenties. The Model "X" shown is from 1912 (SN:10551.)

# Tesla Model S/Model X; Also a '12 model

Twin Chargers =20 kW on-board chargers. Ideal for pairing with High Power Wall Connector. Up to 62 miles of range per hour of charge ($1500 option, std on high end)

Priced starting at $50,000 before government rebates and go all the way up to $100,000 fully equipped. Boasting the latest in battery technology with available 60 or 85 kWh battery options,

Model X should come in right around 210 mi on a full charge for the 60 kWh battery or 270 miles with the 85 kWh battery.

# Overview- Mind Boggling Connectivity- Herding Cats

- From SAE J1772-DC™ conductive couplers to SAE J2954 Wireless PEV charging and the communication standards to connect vehicles to charging infrastructure.
- Smart Grid seems to touch everything-
  - National Institute of Standards Technology (NIST) coordinates SG activities (SGIP, PAP, DEWG)
  - Communication alliances play a role; (Homeplug-Zigbee-Wifi)
- IEEE related PEV charging/SG standards (P2030, P1547, P1901)
- EPRI INFRASTRUCTUREWORKING COUNCIL (IWC)

# SAE J1772-V5 (DC combo) Publication

- 3/23  End comment review
- 3/26-4/9 Topic Post:  A Topic will be posted to allow Task Force members a final review and comment of the draft prior to Hybrid Committee ballot.  Keep in mind this is intended to be a mostly non technical review.  Major technical concerns should be on the Master Comment list that we have been reviewing since 9/30/11.
- 4/16 Submit Hybrid Committee ballot this week
- 5/16 Hybrid Committee complete this week
- 5/16-6/16 Affirmation ballot (if needed) / SAE formatting
- **6/16-716 Motor Vehicle Council Ballot**
- **7/31 Publish**

# Relevant SAE Standards

| | |
|---|---|
| **Safety** | **J2344 – Electric, HEV & Plug-in Vehicle Safety**<br>**J1766 – Crash Integrity Testing**<br>**J2578 – FCV Safety** |
| **Connector/inlet & EVSE** | J1772™ – PEV Conductive Charge Coupler (Released standard)<br>J2954 – PEV Wireless Charge<br>J2894 – Power Quality Requirements for Plug-In Electric Vehicle Chargers<br>[Sub-categories address requirements and test methods] |
| **Communication** | J2836™ – General information (use cases)<br>[Sub-categories address the interface with utilities, off-board charger communications, reverse energy flow, diagnostics, the customer/HAN and wireless charging/discharging, respectively]<br>J2847™ – Detailed information (messages)<br>[Note that use cases and messages are directly related (and developed together), hence this standard has the same sub-categories as J2836]<br>J2931 – Protocol (requirements)<br>J2953 – Interoperability |
| | ™ – Trademarked standards denote publication; final balloted (i.e., 'Released') standards are noted |

# Status of SAE/IEC Standards Harmonization

| | SAE Standard | SAE Status* | ISO/IEC Standard |
|---|---|---|---|
| **Safety** | J2344 – Electric, HEV & Plug-in Vehicle Safety<br>J1766 – Crash Integrity Testing<br>J2578 – FCV Safety | | ISO 6469 – EV Safety<br><br>ISO 23273 – FCV Safety |
| **Connector/inlet & EVSE** | J1772™ – PEV Conductive Charge Coupler<br><br>J2954 – PEV Wireless Charge<br><br>J2894 – Power Quality Requirements for Plug-in Electric Vehicle Chargers<br>J2894/1 – Requirements<br>/2 – Test methods | PUBLISHED<br>- AC charging standards complete<br>- DC 'fast' charging in process<br>In process, launched Dec. 2010<br><br>In process – initiated Oct. 2010 | IEC 62196 – Industrial plugs and socket-outlets<br><br>IEC 61980-1 – Inductive Charging Safety Coupler Supply Eqmt. |
| **Communication** | J2836™ – General information (use cases)<br>J2836/1™ – Utility programs<br><br>/2 – Off-board charger communications<br><br>/3 – Reverse energy flow<br>/4 – Diagnostics<br>/5 – Customer and HAN<br>/6 – Wireless charging/discharging | PUBLISHED, in Step 2*<br><br>In process (Step 1*) ready for Step 2*<br>Next step: Hybrid Committee ballot<br>In process (Step 1*)<br>Kick-off in March 2011<br>Kick-off in March 2011<br>Kick-off in March 2011 | similar to ISO/IEC 15118-1 – Vehicle to grid communication interface (Part 1: General information and use-case definition) |

# Sample of Inter-related Standards

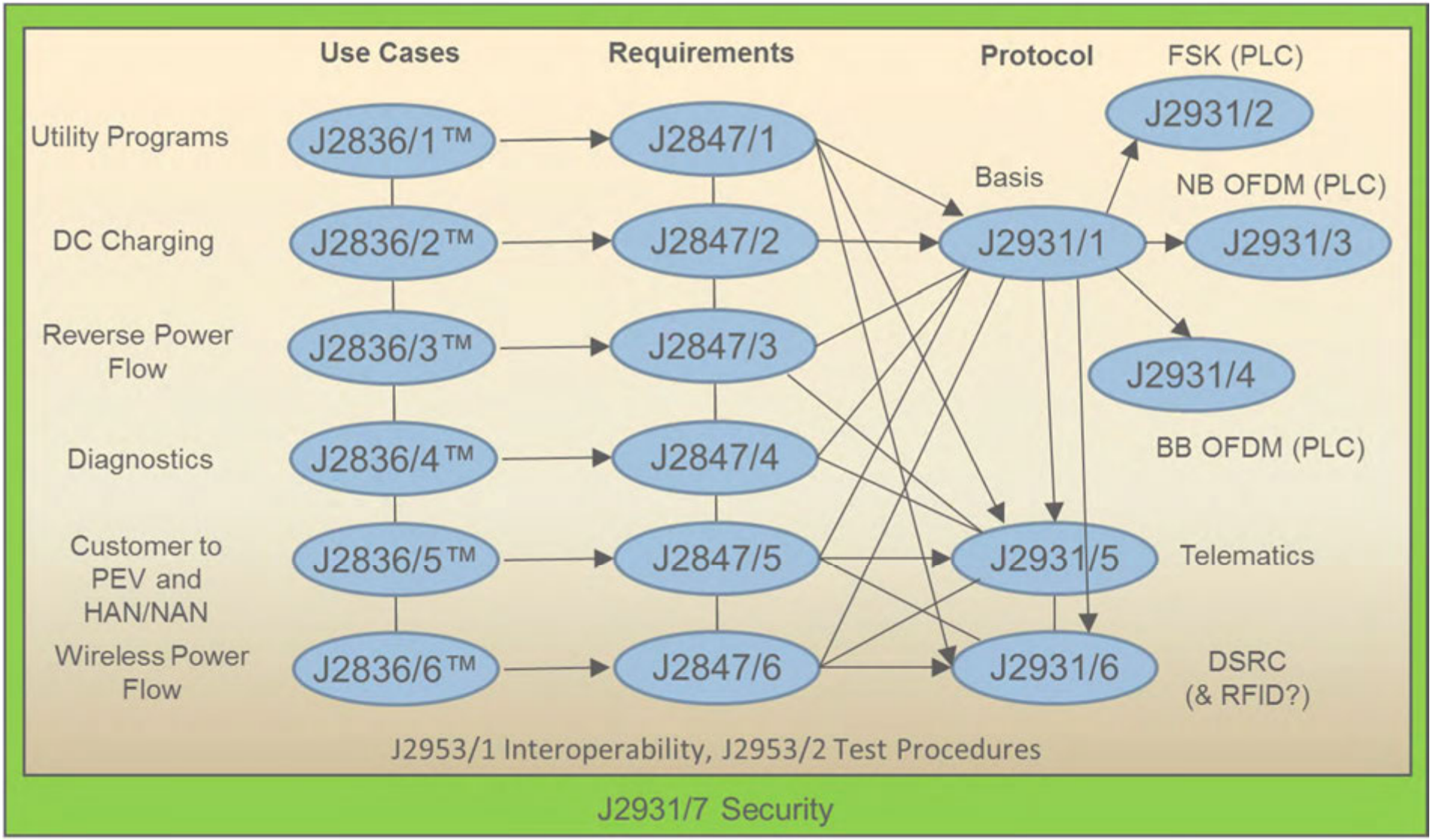

# SAE J2990 Hybrid and EV First and Second Responder Recommended Practice

- FMVSS 305, SAE/NFPA EV Safety Summit resulted in creation of a new Technical Information Reference (J2990)
- DOT is reviewing vehicle post-crash safety procedures
- Examples include moving battery ‘failures’, such as the Chinese Taxi incident shown below, and garage fires where an electric vehicle was stored.

# Historical Perspective on EV Charging Equipment 1900 to Today ….and Tomorrow

1913- 150A/48vdc coupler
(30,000 EVs in 1913)

*The electric vehicle - raising the standards*

*Figure 3.25: 150 A charging plug with handle*[101]

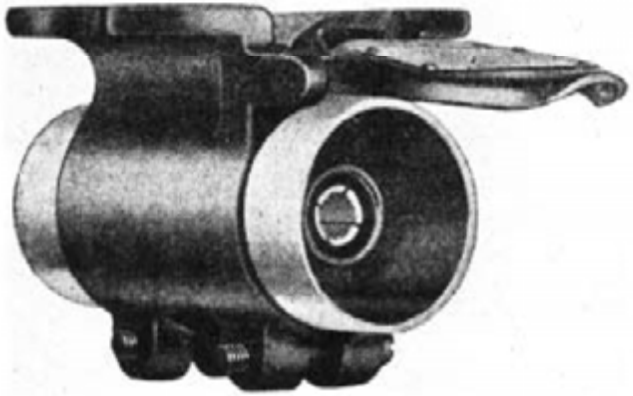

*Figure 3.26: 150 ampere-hour (sic) charging receptacle*[102]

1990's J1772 Conductive
SAE J1773 Inductive

2010 SAE J1772 Level 2
240vac/<80A (32A typ.)

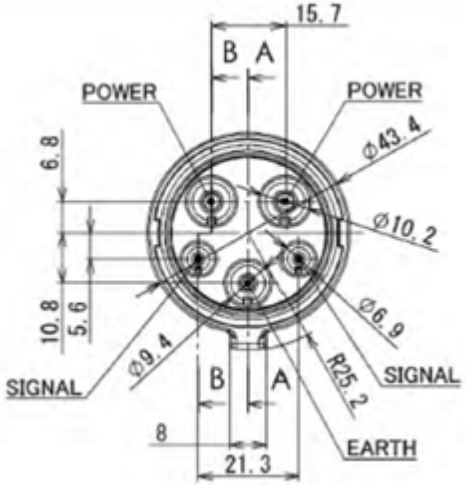


2011 SAE J2954
Wireless Charging

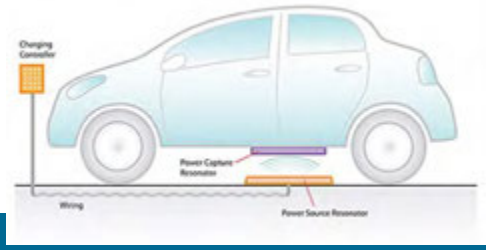

# SAE J2954 Wireless Charging- 7 sub-teams

- Classification of different charging types and minimum efficiency per charging type;
- Interoperability including center operating frequency of charging ;
- Communications & software (harmonize with SAE conductive charging);
- Validation testing (vehicle, charger, system);
- Parking alignment between the vehicle secondary coil and the primary coil of the wireless charging unit (EV Supply Equipment, EVSE);
- Location on vehicle and orientation of charger;
- Safety items, including obstacle detection, both organic and inorganic; magnetic field levels; charging battery state of charge levels and rate; temperature development tests; and electric shock; and
- Design validation test and wireless charging verification test.

**1 POWER SUPPLY**
Converts mains frequency (50Hz) to high frequency (20kHz) current for supply to transmitter pad. High frequency is necessary to ensure highly efficient transfer with low emissions.

**2 TRANSMITTER PAD**
High-frequency energy creates a strong magnetic field above the pad. The design of the magnetic topology is crucial to transfer power over practical gaps – between 80mm and 400mm.

**3 MAGNETIC COUPLING**
Power and data flow across the gap in a tightly controlled and contained magnetic field that meets international magnetic field emissions.

**4 RECEIVER PAD**
High-frequency current is induced in the receiver pad and sent to the controller, excellent magnetics design provides small form factor pads for ease of vehicle packaging whilst maintaining high tolerance to misalignment required.

**5 CONTROLLER**
Regulates power and converts high frequency to DC for supply to the batteries, communicates with the vehicle control and battery management systems.

**6 BATTERY**
Stores energy from wireless charging system to power electric motor.

# DC Fast Charging Couplers: JARI-ChAdEMO->SAE J1772-Hybrid

*Look mom, no lever!*
*Due to fewer Comm. Pins*

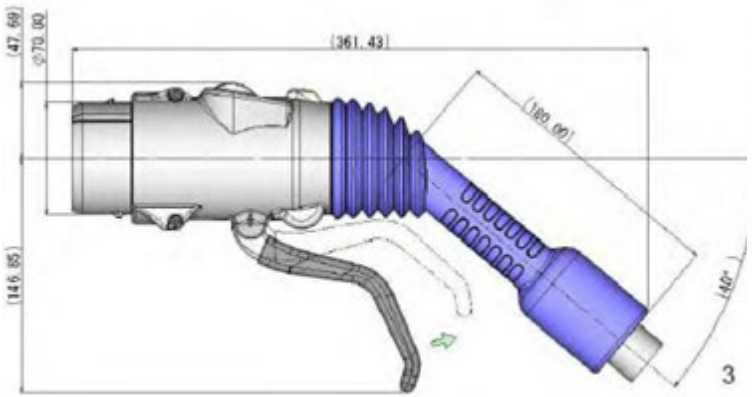

The J1772 coupler standard is being revised to address dc fast charging (enabled by the two pins at bottom) in addition to ac charging, the

Nissan Leaf uses two connectors (DC-JARI and AC-J1772)

| Level | Volts | Amps |
|---|---|---|
| AC-1 | 120 | 20 |
| AC-2 | 240 | <80 |
| DC-1 | <450 | <80 |
| DC-2 | <450 | <200 |
| DC-3 | <600 | <400 |

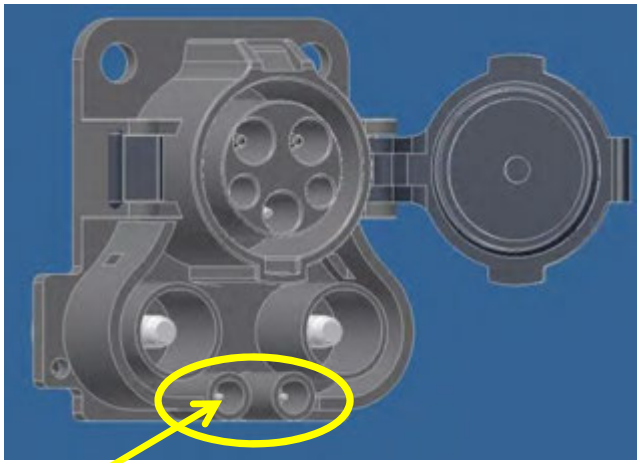

CAN Pins avoided via J2931 PLC over Pilot

SAE/ISO AC+DC Combo J1772)

# Conductive EV Charging Couplers Around the World

## Global Differences in Connectivity

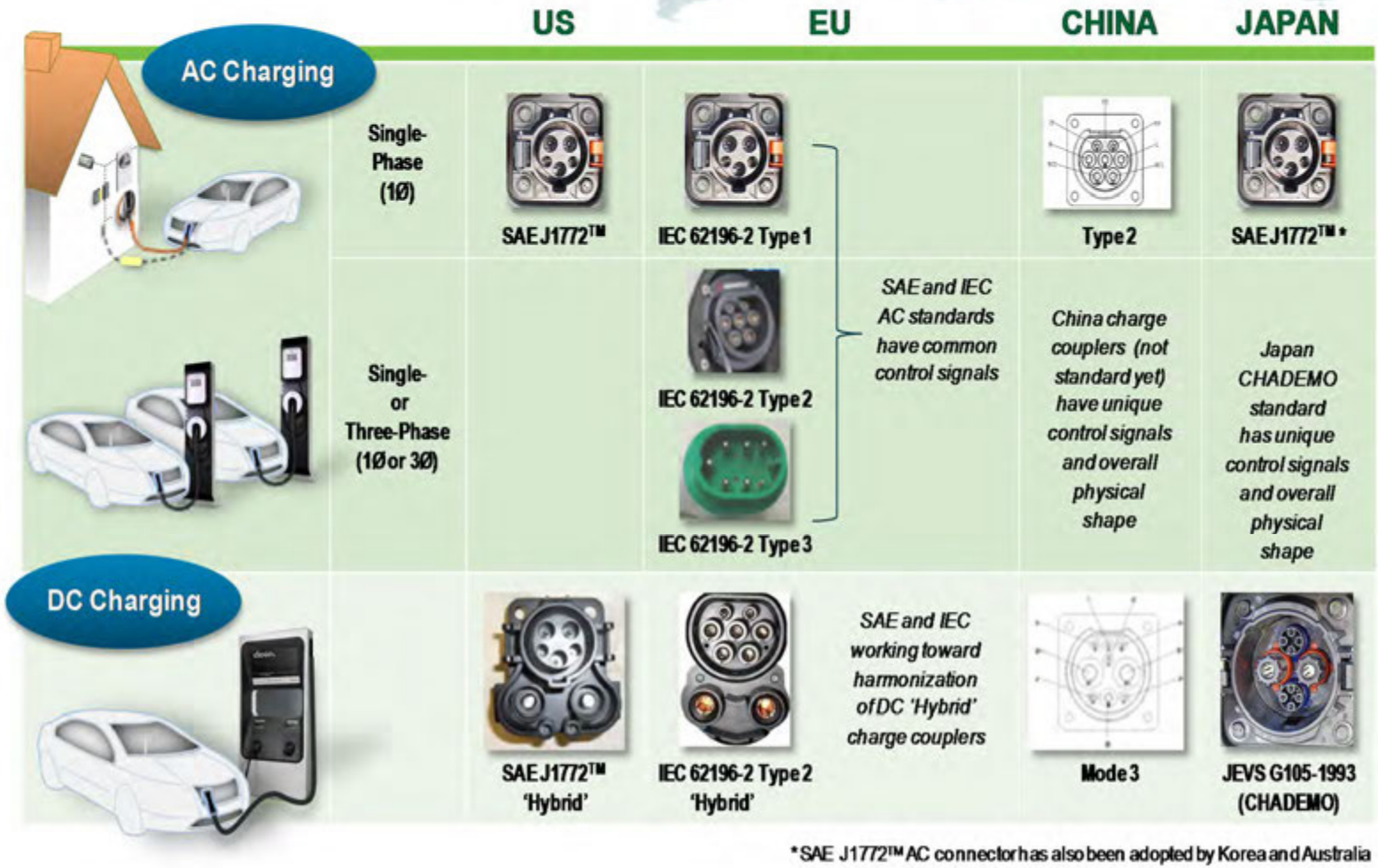


*SAE J1772™ AC connector has also been adopted by Korea and Australia

# AC/DC Connector Standards Around the World

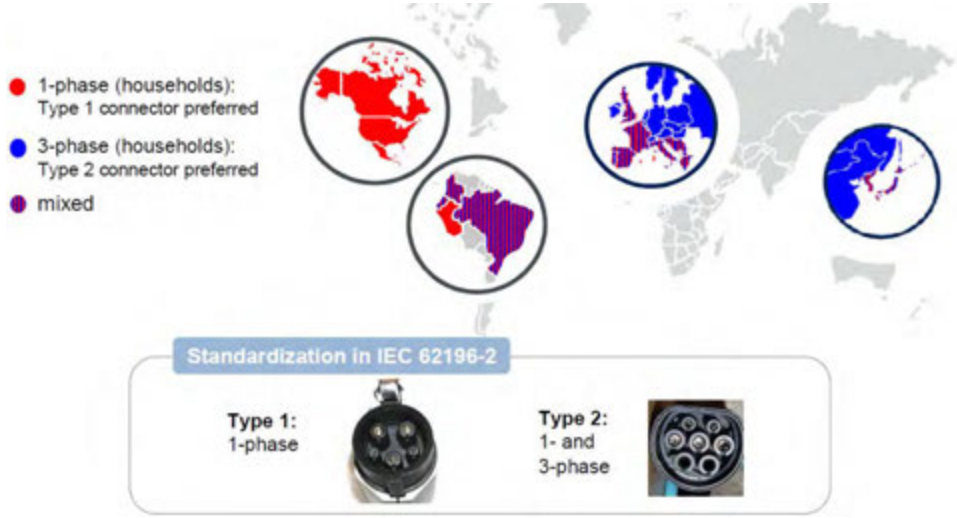


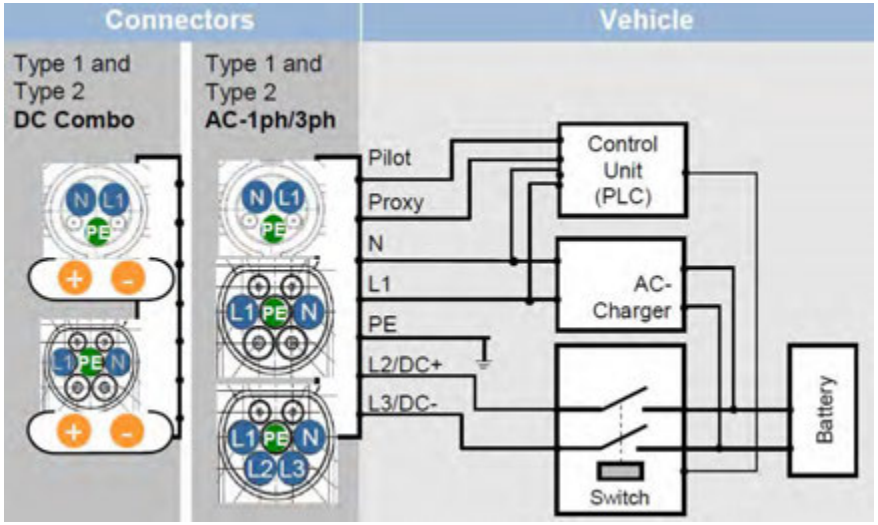


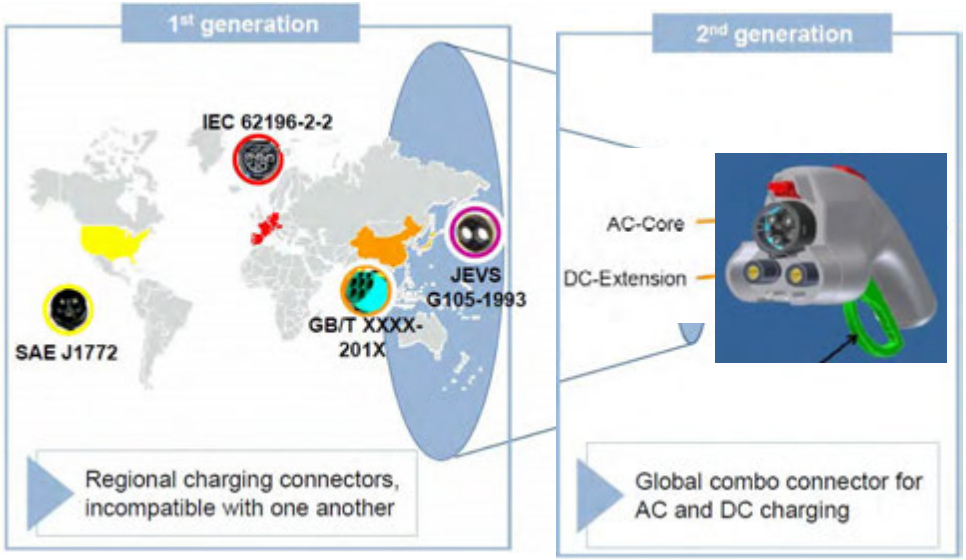


A detailed analysis of design options confirmed the feasibility of lean design.

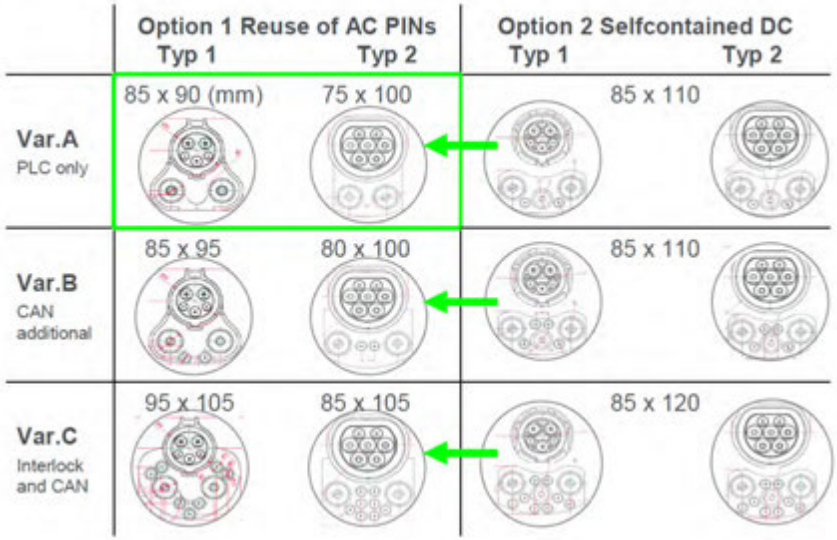

# Equipped to Charge…..Safely

- General Purpose of Electric Vehicle Supply Equipment (EVSE) is to be an intelligent interlocked coupling system
- AC, DC, or wireless high frequency resonant AC
- Typical crossover from on-board (AC) to off-board (DC) charging is ~6kW due to volume/cost

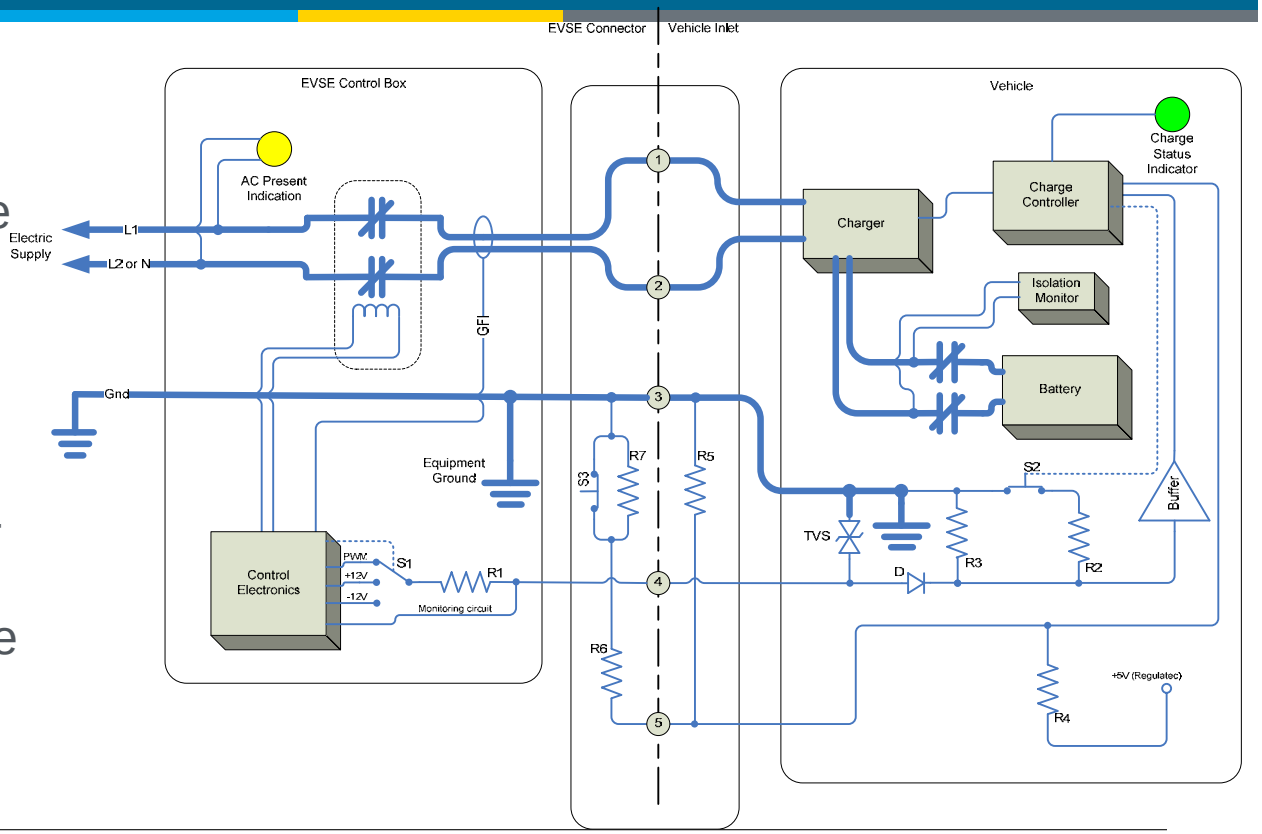


| Contact # | Connector Function | Vehicle Inlet Function | Description |
|---|---|---|---|
| 1 | AC Power (L1) | Charger 1 | Power for AC Level 1 and 2 |
| 2 | AC Power (L2,N) | Charger 2 | Power for AC Level 1 and 2 |
| 3 | Equipment ground | Chassis ground | Connect EVSE equipment grounding conductor to EV/PHEV chassis ground during charging |
| 4 | Control pilot | Control pilot | Primary control conductor (operation described in Section 5) |
| 5 | Proximity Detection | Proximity Detection | Allows vehicle to detect presence of charge connector |

# End Goal: 'Fill the Bucket', Safely
# Anatomy of a PHEV Battery Pack

Chevy Volt example: 288 cells, 16kWhr; 3.3kW onboard charger

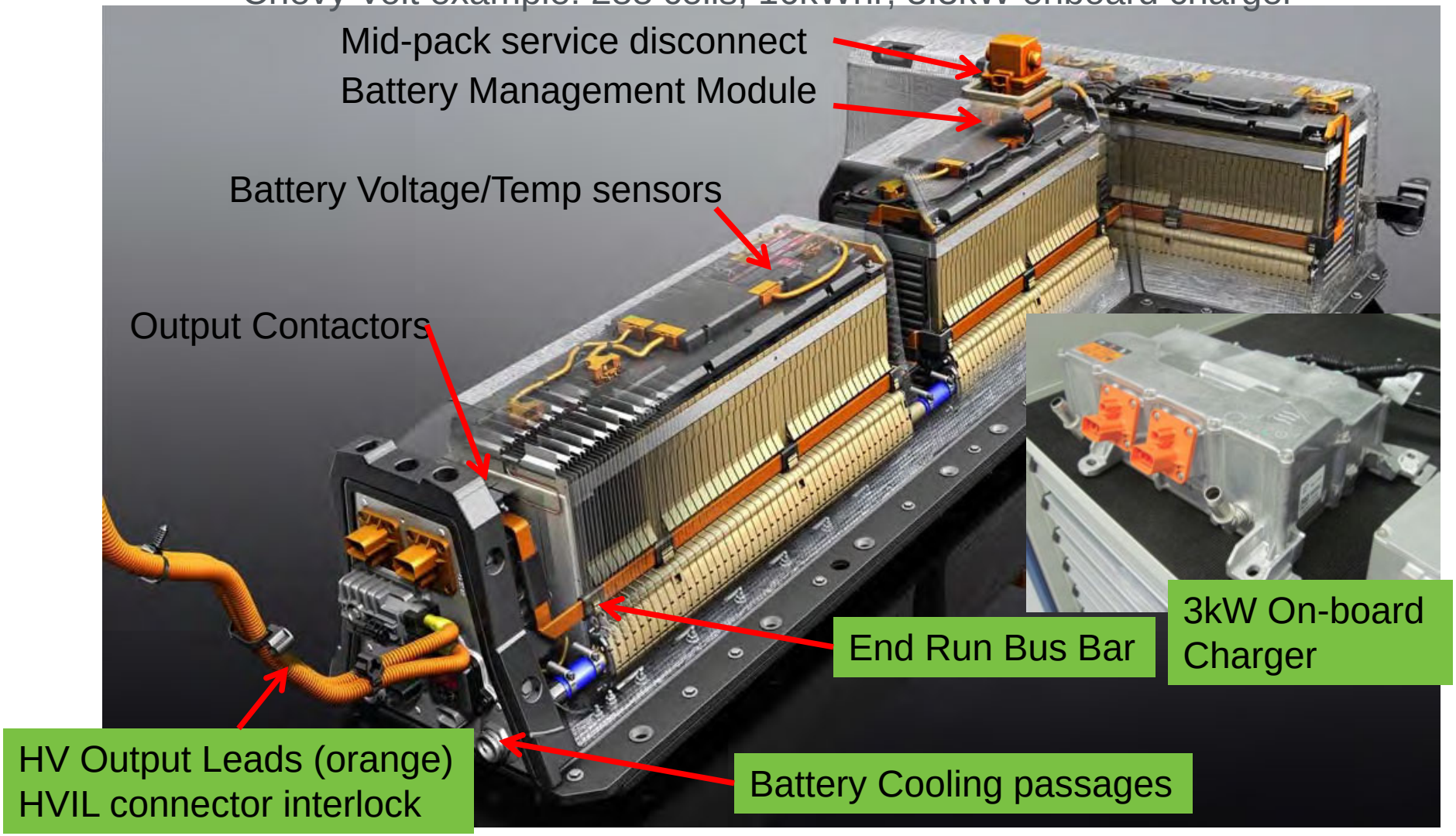

# Electric Vehicle Supply Equipment (EVSE)- Effectively a Very Safe Contactor/Coupler

- General Purpose of Electric Vehicle Supply Equipment (EVSE) is to be an intelligent interlocked coupling system
- AC, DC, or wireless high frequency resonant AC
- Typical crossover from on-board (AC) to off-board (DC) charging is ~6kW due to volume/cost

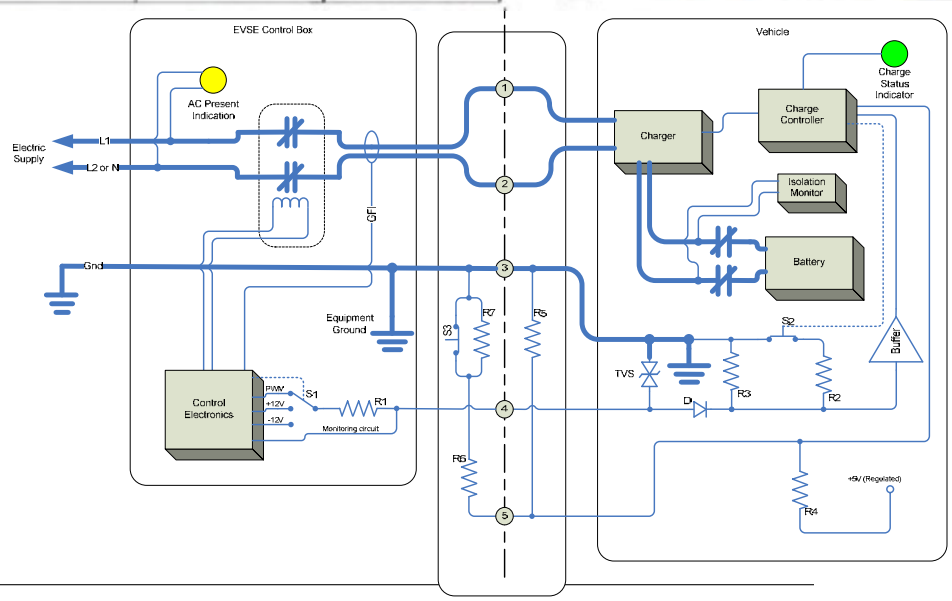


| Contact # | Connector Function | Vehicle Inlet Function | Description |
|---|---|---|---|
| 1 | AC Power (L1) | Charger 1 | Power for AC Level 1 and 2 |
| 2 | AC Power (L2,N) | Charger 2 | Power for AC Level 1 and 2 |
| 3 | Equipment ground | Chassis ground | Connect EVSE equipment grounding conductor to EV/PHEV chassis ground during charging |
| 4 | Control pilot | Control pilot | Primary control conductor (operation described in Section 5) |
| 5 | Proximity Detection | Proximity Detection | Allows vehicle to detect presence of charge connector |

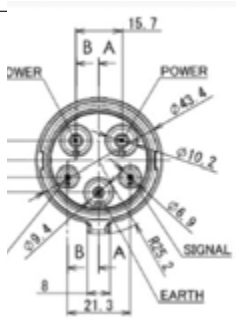

# Basic Definitions of PEV Charging Systems - Utility, HAN/EMS, EVSE, PEV

1) **Utility provider-** commercial, residential setting, including Smart Grid communication

2) **Home Energy Mgmt-** Home gateway for demand reduction settings/information portal (~$50)

3) **EVSE- Charging Station-** Electric Vehicle Supply Equipment- either AC or DC, w/revenue & comm. (~$450-$5k)

4) **Plug-In Electric Vehicle**
- 4kWhr PHEV Prius
- 8kWhr Volt
- 24kWhr Leaf
- 53kWhr Tesla

**Utility Messages**
900MHz to back-haul
2.4GHz Zigbee to HAN
(Itron or SilverSpring)

**HomeGateway**
Digi, Greenwave Reality
HAN- Zigbee/Ethernet

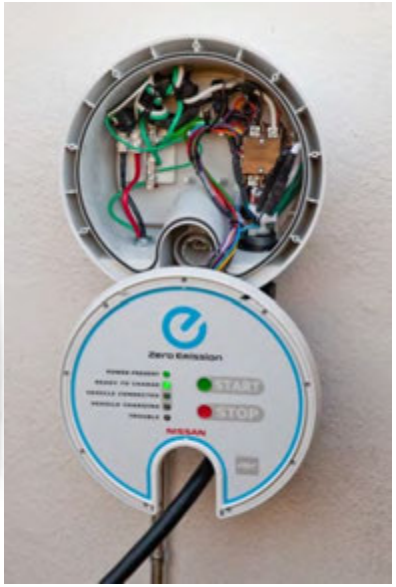


**EVSE with Compact Metrology** and Vehicle-EVSE Router pass through
HAN- Zigbee/Ethernet

**Emulated PEV/Physical EV,-**
Connected to J1772, or (BMS, Pseudo Batt, Charger, CAN network/converter- to DUT)

# SAE J2953-PEV-EVSE Compatibility
# EVSE-PEV-EUMD-Utility Test Fixture/Tools

Many Combinations of EVs, EVSE and Utility Region Installations

Occasional use cable EVSE DC off board charger

Utilities

? Interoperability ?

# Networks for Energy Management Are a Key Element of Smart Grid Architectures

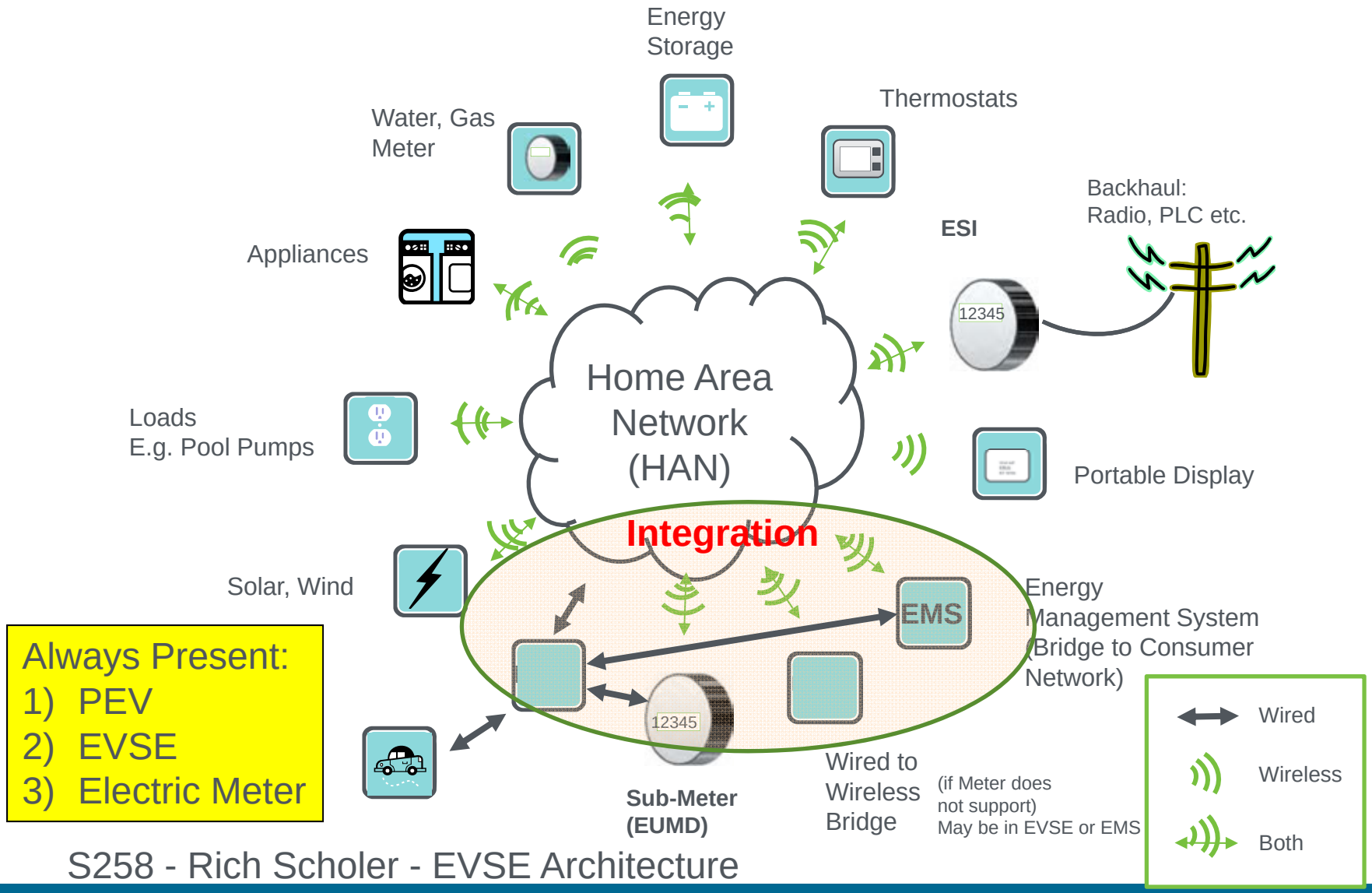


Always Present:
1) PEV
2) EVSE
3) Electric Meter

S258 - Rich Scholer - EVSE Architecture

# Where Does the End Use Monitoring Device (EUMD) Reside? Depends on Perspective

The UEMD measures just the branch circuit power flow to the EV, but may be located in different segments of that branch.

1) **Utilities** tend to favor locating it in an outdoor, technician accessible area, such as **next to the main meter**; possibly as a fused sub-panel with dedicated run to EVSE.
2) **Home Owners** may want it next to their service panel or in garage **near the EVSE**.
3) **EVSE manufacturers** want to build it into the EVSE, or in a socket **in the EVSE**.
4) **Auto manufacturers** may want the EUMD **on-board the vehicle** to simplify access to EUMD information.

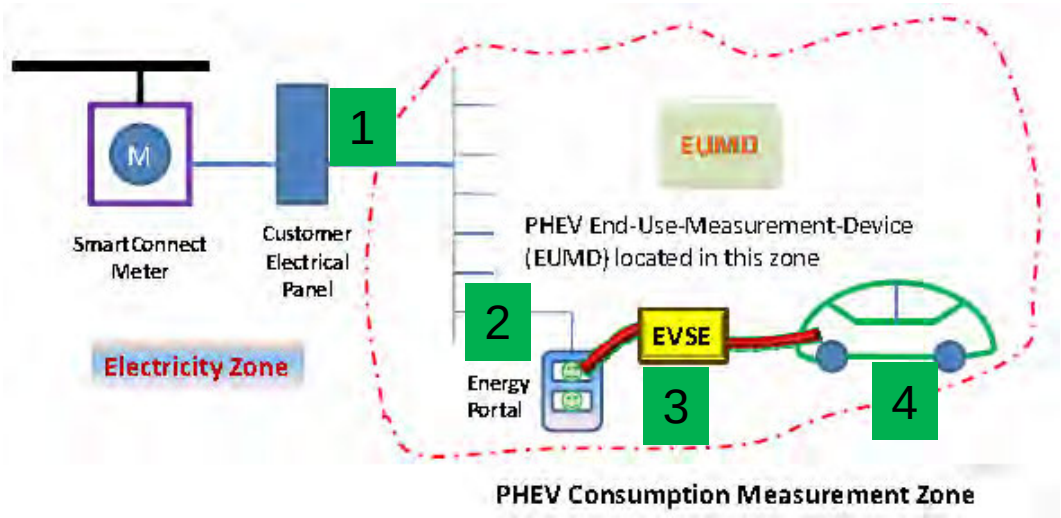

# Vehicle & Supply Equipment Variations

## Typical Vehicle Rechargeable Energy Storage System (RESS) Capacity size variations:

HEV 1.5 kWh → PHEV 8 kWh → BEV 25 kWh, BEV 50 kWh, BEV 95 kWh

Full Hybrid (does not plug-in)

Plug-In Hybrid (plug in plus hybrid engine)

Battery Electric (only plugs in)

## Electric Vehicle Supply Equipment (EVSE) Connection architectures:

AC Level 1

Cordset (120V)

1.5 or 2 kWh

(15 or 20A outlet)

→

AC Level 2

Premise unit (240V) – up to 19.2 kW (80A)

Premise unit greater than 19.2 kW

→

DC Level 1, 2 & 3

Premise unit that includes the charger

AC Level 3

(> 20 kW & 3φ)

Mode 1, 2, 3, 4

Case A, B & C

ISO/IEC

AC 1φ and 3φ

# Charge location & power levels

## Power Level Summary

- AC L1 (1.4 kW)
  - Street parking, parking garages, businesses
- AC L2 (7 kW)
  - Parking lots, parking garages, businesses
- DC L1 (35-45 kW)
- DC L2 (50-100 kW)
- DC L3 (150 kW)

- AC L1 (1.4 kW)
- AC L2
  - 7 kW
- DC L1

- AC L1 (1.4 kW)
- AC L2
  - 7 kW – most installations
  - 20 kW – allowed by J1772™
- DC L1 (10-20 kW)

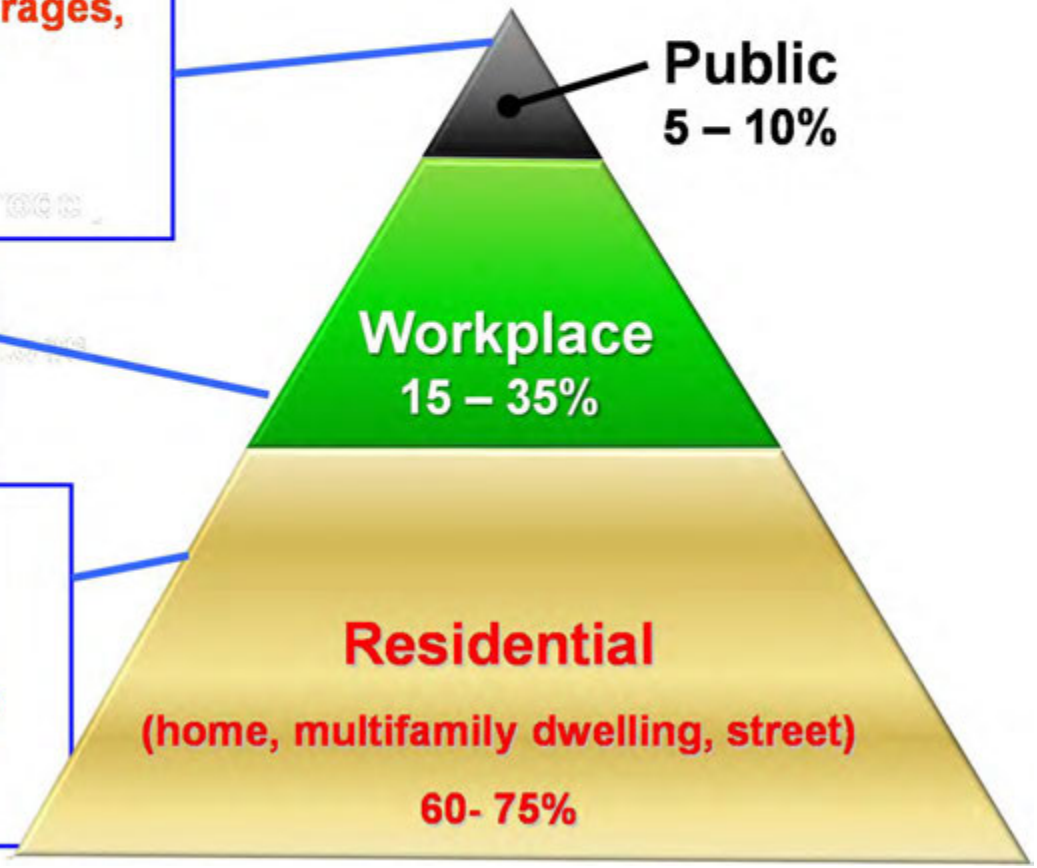


Source: R. Scholer VPPC , 2011- Smart Grid Charging and V2G

# Transformer Sizing

# Typical home loads and service

## (sized for average, not peak demands)

| | Totals | Watts AC | Heat |
|---|---|---|---|
| Sink Disposal | 1,000.00 | 1,000.00 | 1,000.00 |
| Water Heater | 2,400.00 | 2,400.00 | 2,400.00 |
| Garage Door | 1,500.00 | 1,500.00 | 1,500.00 |
| Dish Washer | 1,600.00 | 1,600.00 | 1,600.00 |
| Clothes Dryers | 5,000.00 | 5,000.00 | 5,000.00 |
| Oven | 1,500.00 | 1,500.00 | 1,500.00 |
| Range | 1,500.00 | 1,500.00 | 1,500.00 |
| AC compressor | 4,000.00 | | |
| condenser fan | 240.00 | | |
| air handler | 345.00 | 4,585.00 | |
| heat coils | 15,000.00 | | 18,845.00 |
| space heater | 3,500.00 | | |
| Pool pump | | | |
| Lighting | 1,200.00 | 1,200.00 | 1,200.00 |
| Plazma TV | | | |
| Other | | | |
| | 38,785.00 | 20,285.00 | 34,545.00 |
| Less heat and AC | | 15,700.00 | 15,700.00 |
| BEV | 19,200.00 | 19,200.00 | 19,200.00 |
| PHEV | 3,300.00 | 3,300.00 | 3,300.00 |
| Peak Values: BEV added | 57,985.00 | 39,485.00 | 53,745.00 |
| Peak Values: PHEV added | 42,085.00 | 23,585.00 | 37,845.00 |
| Peak Values: Both | 61,285.00 | 58,485.00 | 72,745.00 |

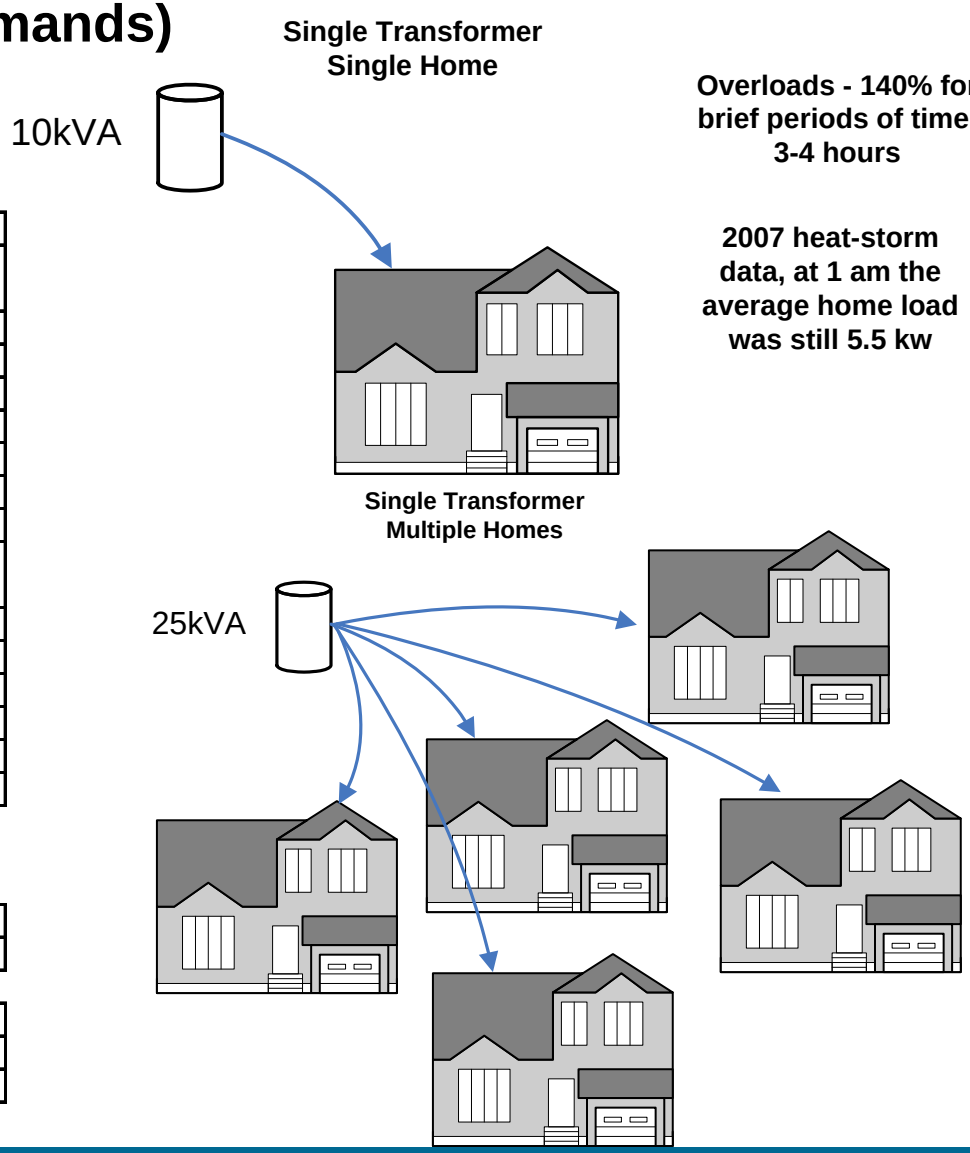


**Overloads - 140% for brief periods of time, 3-4 hours**

**2007 heat-storm data, at 1 am the average home load was still 5.5 kw**