Autothermal Reformer Based Fuel Processor for a Residential Fuel Cell System

R. Ahluwalia[1], S.H.D. Lee[1], D. Papadias[1], S.Ahmed[1], and H. Adachi[2]
[1]Argonne National Laboratory, Argonne, IL, U.S.A.
[2]The Japan Institute of Energy, Chiyoda-ku, Tokyo, Japan

Background

Fuel cell power systems are being deployed in Japan to meet or supplement the heat and electric power needs of private residences. These stand-alone fuel cell systems are typically fueled with natural gas, which is converted to hydrogen via the steam reforming reaction. Given the heat and power demands of the household, these systems are designed for daily start-ups followed by a few changes in load over the course of the day.

Fuel efficiency is a key driver for the implementation of fuel cell systems and the efficiency is appropriately viewed over the life cycle of the system. A system with a large thermal mass will impose penalties in start-up time and fuel consumption. It is anticipated that, compared to a steam-reformer based system, an autothermal reformer (ATR) based fuel processor has the potential to significantly reduce the thermal mass since the ATR operates at much higher (one to two orders of magnitude higher) space velocities. Furthermore, ATRs have been demonstrated to have faster start-up performance and are more responsive to load changes.

Fuel Processing System

We have evaluated various configurations of a fuel processing system (FPS) as a part of a fuel-cell cogeneration system for residential applications to meet the following principal requirements.

a) The FPS is fueled by natural gas (NG) with an average composition of 88% CH_4, 5.8% C_2H_6, 4.5% C_3H_8 and 1.7% C_4H_{10}.
b) The FPS supplies hydrogen to a fuel cell system (FCS) capable of generating 1-kW_e AC power at >31% electric efficiency, based on higher heating value (HHV) of the fuel.
c) The FPS must maintain efficiency greater than 80% on the HHV basis over its operating range of 30% to 100% of rated capacity.
d) The FPS is based on an autothermal reformer (ATR) to convert NG to syngas rich in CO and H_2. The startup energy must be less than 3.6 MJ (1 kWh).

We identified two FPS configurations that offer particular advantages. The first configuration, termed C1, relies on passive non phase-change devices to recover process water and supply steam to the ATR. It offers higher thermal efficiency than the current state-of-the-art practice as it does not produce low-grade heat in the condenser that is difficult to utilize because of a pinch-point temperature limitation. The operating steam-to-carbon (S/C) ratio in the ATR, however, is constrained by the fuel-cell stack temperature and by the pressure drops in the FPS and in the downstream components. The second configuration, termed C2, overcomes this limitation by raising additional steam using the waste heat in the burner effluent. The S/C in C2 is higher, resulting in improved FPS efficiency but the system is more complex than C1.

Figure 1 shows the thermal integration of the fuel processor with the downstream components in configuration C2. At reference conditions (50% O_2 and 80% fuel utilization in stack, 80°C stack temperature, 5/2 psi pressure drops in anode/cathode circuits, 700°C ATR exit temperature, 3% heat loss), the ATR operates at a S/C of 2.9. The reformate leaving the ATR is first used to preheat the process air to 550°C in a high-temperature recuperator and then it is quenched with steam to the inlet temperature of the first-stage water gas shift (WGS) reactor. The steam quench increases the overall S/C in the fuel processor to 5.7. Table 1 compares the thermal efficiencies of the FPS in configurations C1 and C2, and the electric and the combined thermal and electric efficiencies of the FCS. Also included in Table 1 is the performance of C2* in the limit of maximum S/C that is possible in ATR.

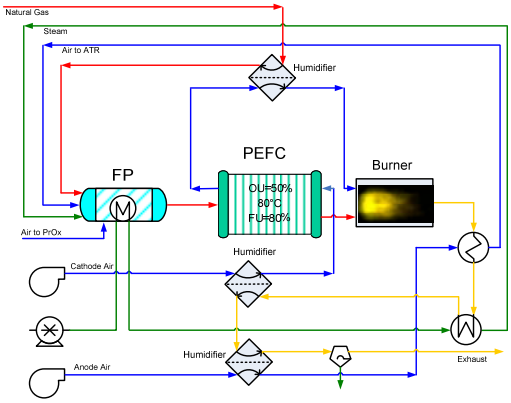

Figure 1. Fuel cell system configuration

	C1	C2	C2*
ATR Temperature	700°C	700°C	700°C
S/C (ATR)	1.61	2.87	3.26
S/C (FPS)	4.4	5.7	6.1
%CO (ATR)	9.6	6.8	6.2
%CH_4 (ATR)	0.22	0.06	0.04
Efficiency (HHV)			
FPS (%)	88.1	89.0	89.0
FCS (%)	30.9	31.3	31.3
Total (%)	82.5	82.5	82.6
Heat Recovery			
Stack Radiator (W)	1236	1304	1304
Anode Cooler (W)	59	186	248
Burner HX (W)	284	61	0
Desuperheater (W)	88	88	89
Condenser (W)	0	0	0
Total (W)	1668	1640	1641

Table 1. Performance of FPS in C1 and C2

Figure 2 shows the temperature profile and the concentrations of CO and H_2 at various points in the FPS. Humidified natural gas and process air enter the ATR at a mixing-cup temperature of 475°C. The reformate exits the ATR at 700°C, is cooled to 490°C in the high-temperature recuperator (HRC), and is then further cooled to 375°C by steam injection. The WGS reaction is mildly exothermic, so that the reformate temperature rises to 430°C after WGS-1. The reformate is cooled to 300°C in the heat exchanger HW-2. There is a 5°C temperature rise in WGS-2. The heat exchanger HP-1 cools the reformate to 120°C – the target inlet temperature for the PrOx reactors. The reformate temperature rises by ~15°C in PrOx-1 and by ~10°C in PrOx-2. The dew point temperature of the reformate leaving PrOx-2 is >77°C so that no further humidification is required to meet the >90% RH target. The reformate is cooled to 80°C in the heat exchanger HP-2.

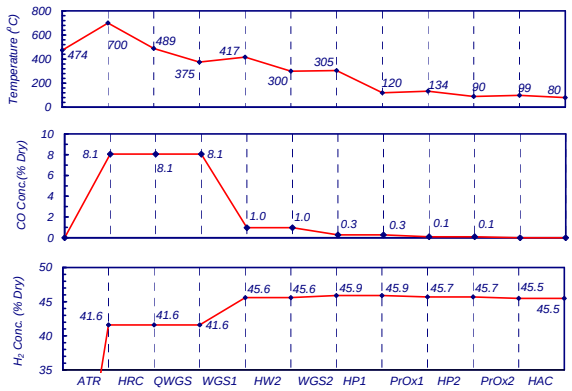

Figure 2. Temperature and concentration profiles across the fuel processor system

The heat exchangers HW-2, HP-1, HP-2 and HAC are either cooled with water from the cogeneration circuit or with process water that is converted to steam to quench the reformate to 375°C at the inlet to WGS-1.

The CO concentration in the reformate is 8.1% at the exit of the ATR (on a dry basis). The WGS reactors reduce the CO concentration to 1.1% in the first stage and to 0.3% in the second stage. The PrOx reactors further reduce the CO concentration to 0.1% in the first stage and to 2 ppm in the second stage.

The H_2 concentration in the reformate is 41.6% at the exit of ATR (on a dry basis). The WGS reactors raise the H_2 concentration to 45.6% in the first stage and to 45.9% in the second stage. The H_2 concentration decreases in the preferential oxidation reactors to 45.7% in the first stage and to 45.5% in the second stage.

The two-stage PrOx reactor in the reference system has an overall CO selectivity of 55%. The first stage operates at a stoichiometry of 1.1 (i.e., O-to-CO ratio) and achieves a CO selectivity of 63%. The second stage operates at a CO stoichiometry of 2.2 and achieves a CO selectivity of 44%. The overall CO stoichiometry in the two-stage PrOx is 1.8.

We have estimated the startup energy for the FPS. At 100% heat transfer effectiveness, the amount of fuel energy needed for FPS startup is 430 kJ, well below the target of 3.6 MJ. As a comparison, the fuel energy consumed in generating 8 kWh of electricity, the average daily demand on FCS, is 83.6 MJ at 34.5% average electrical efficiency. In a daily cycle that involves one startup and shutdown and 8 kWh of electricity generation, the startup energy is only a small fraction (0.5%) of the fuel energy consumed in generating the electric power. Thus, it would be advantageous to increase the system efficiency, for example, by using a lower approach temperature in the recuperator, at the expense of a slightly greater startup energy consumption.

For the ATR, we selected a noble-metal catalyst rather than the lower-cost Ni based one because of the latter's tendency to deactivate due to coke formation. We chose rhodium supported on metal oxides because it has been shown to have significantly higher activity and hydrogen selectivity for reforming than other noble-metal catalysts [1]. In partial oxidation of methane, for example, conversion of methane is close to thermodynamic equilibrium with a Rh catalyst even at short contact times with little or no macroscopic carbon deposition being observed. Based on literature data and in-house experience, we selected La-stabilized alumina as the support for Rh since it maintains a high surface area even at temperatures up to 900°C. Further, we selected a metal (FeCrAlY) foam rather than ceramic monoliths as the support for the Rh/La-Al_2O_3 catalyst because of its higher thermal conductivity and superior ability to disperse heat in the radial direction [2]. We expect the foam support to be more effective than ceramic monoliths in avoiding formation of hot or cold spots due to imperfect mixing of the reactants. Furthermore, foams typically achieve an order of magnitude higher heat and mass-transfer rates than monoliths, yet they have comparable surface areas to provide good catalyst utilization.

The autothermal reactor deploys dual catalyst beds to maintain high catalyst durability and activities at elevated temperatures. The front section of the ATR, where temperatures are high, has a rugged, non precious-metal combustion catalyst. The space velocity in the front bed is chosen so as to complete the combustion reactions and to conduct sufficient endothermic steam reforming reaction such that the downstream Rh catalyst, which is susceptible to sintering, is not exposed to temperatures in excess of 900°C.

We chose a precious-metal Pt/CeO_2 catalyst for the water gas shift reactors because of the many concerns with the base-metal Fe-Cr and Cu-Zn oxide catalysts. With a suitable promoter, Pt/CeO_2 shows zero reaction order with respect to CO [3]. The advantage of the zero reaction order is evident in Fig. 3 that presents CO conversion in the first-stage and second-stage shift reactors with Pt/CeO_2 supported on 40-ppi FeCrAlY metal foams. Based on the reaction kinetics derived for Pt-Re/$Ce_{0.46}Zr_{0.54}O_2$, we expect to approach equilibrium conversions with space velocities of 40,000 h^{-1} in the first-stage and 20,000 h^{-1} in the second-stage shift reactors.

The PrOx reactors use commercially available BASF Selectra® catalyst supported on a Corning 600-cpi cordierite monolith [4]. Provisions have been made to ensure uniform mixing of the reformate stream with air upstream of the reactor and to control the inlet temperature in order to obtain high CO selectivity.

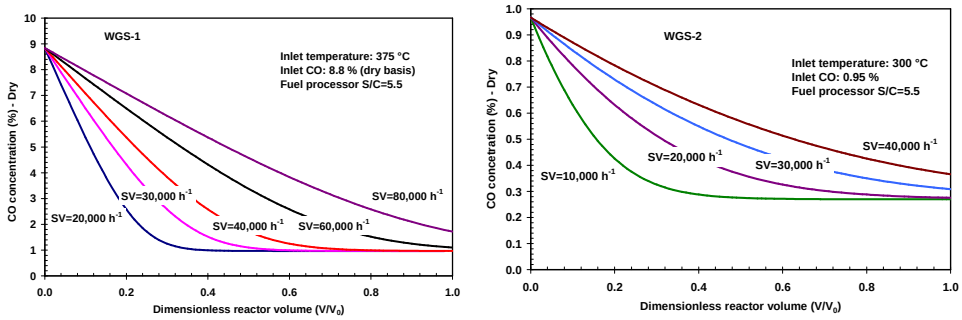

Figure 3. Conversion in shift reactors at different space velocities

Summary and Conclusions

An ATR-based fuel processor has been designed to produce fuel-cell quality hydrogen-rich stream containing less than 2 ppm CO. The design uses water recovered from the fuel cell system (cathode and burner exhausts) for the autothermal reformer and the water gas shift reactors. Thermal integration is based upon feed preheating, steam generation, and steam distribution within the fuel processor. These and other process options lead to a reformate stream containing up to 46% hydrogen (dry basis) and with very attractive FC system efficiencies (82% of HHV, 91% of LHV). Considering the thermal mass of the fuel processor only, it is estimated that the energy required for each cold start (from ~25°C) will be less than 500 kJ. The fuel energy needed to meet the daily requirement of 8 kWh of electricity is expected to be 84 MJ, including the start-up energy.

Acknowledgements

This work was supported by the Japan Institute of Energy. Argonne National Laboratory is operated for the U. S. Department of Energy by UChicago Argonne, LLC, under contract DE-AC-02-06CH11357.

References

1. M. Ferrandon and T. Krause, “Role of the oxide support on the performance of Rh catalysts for the autothermal reforming of gasoline and gasoline surrogates to hydrogen,” *Applied Catalysis A: General*, **311**: 135–145, 2006.
2. V. V. Calmidi and R. L. Mahajan, “Forced Convection in High Porosity Metal Foams,” *Journal of Heat Transfer*, **122**: 557–565, 2000.
3. S. Y. Choung, M. Ferrandon, and T. Krause, “Pt-Re bimetallic supported on CeO_2-ZrO_2 mixed oxides as water–gas shift catalysts,” *Catalysis Today*, **99**: 257–262, 2005.
4. R. K. Ahluwalia, et al, “Performance of CO preferential oxidation reactor with noble-metal catalyst coated on ceramic monolith for on-board fuel processing applications,” *Catalysis Today*, **99**: 271-283, 2005.