Overview of SAE Standards for Plug-in Electric Vehicle

Theodore Bohn and Hina Chaudhry
Center for Transportation Research, Energy Systems Division
Argonne National Laboratory

Need for Standards

- Required for the fast adoption of the electric vehicles
- Required for the proper functioning of the various systems that constitute the electric vehicle infrastructure
- To provide vendors and manufactures of electric vehicle equipment with clear guidelines in order to make their product compatible and usable.

SAE Standards

- Electric Vehicle and Plug in Hybrid Electric Vehicle Conductive Charge Coupler- **SAE J1772**
- Communication between Plug-in Vehicles and the Utility Grid- **SAE J2847-1**
- Use Cases for Communication between Plug-in Vehicles and the Utility Grid- SAE **J2836-1**
- And many more…

Electric Vehicle and Plug in Hybrid Electric Vehicle Conductive Charge Coupler- J1772

- First and only such standard in the world to reach the industry consensus
- Spells out the physical and electrical characteristics of the connector and the vehicle electrical inlet
- Enables the charging at 120 or 140 volts with a connector of standardized dimension and function to optimize the ease of use

Electric Vehicle and Plug in Hybrid Electric Vehicle Conductive Charge Coupler- J1772

- General Conductive Charging System
- Conductive charging system consists of a charger and a coupler
- 3 functions, 2 electrical and 1 mechanical
- First electrical function converts the AC to DC and is commonly referred to as rectification
- Second electrical function is the control or regulation of the supply voltage to a level that permits a managed charge state based on the battery charge acceptance characteristics
- Mechanical function is the physical coupling or connecting of the EV/PEV to the EVSE and is performed by the user

Conductive EV/PHEV Charging System Architecture

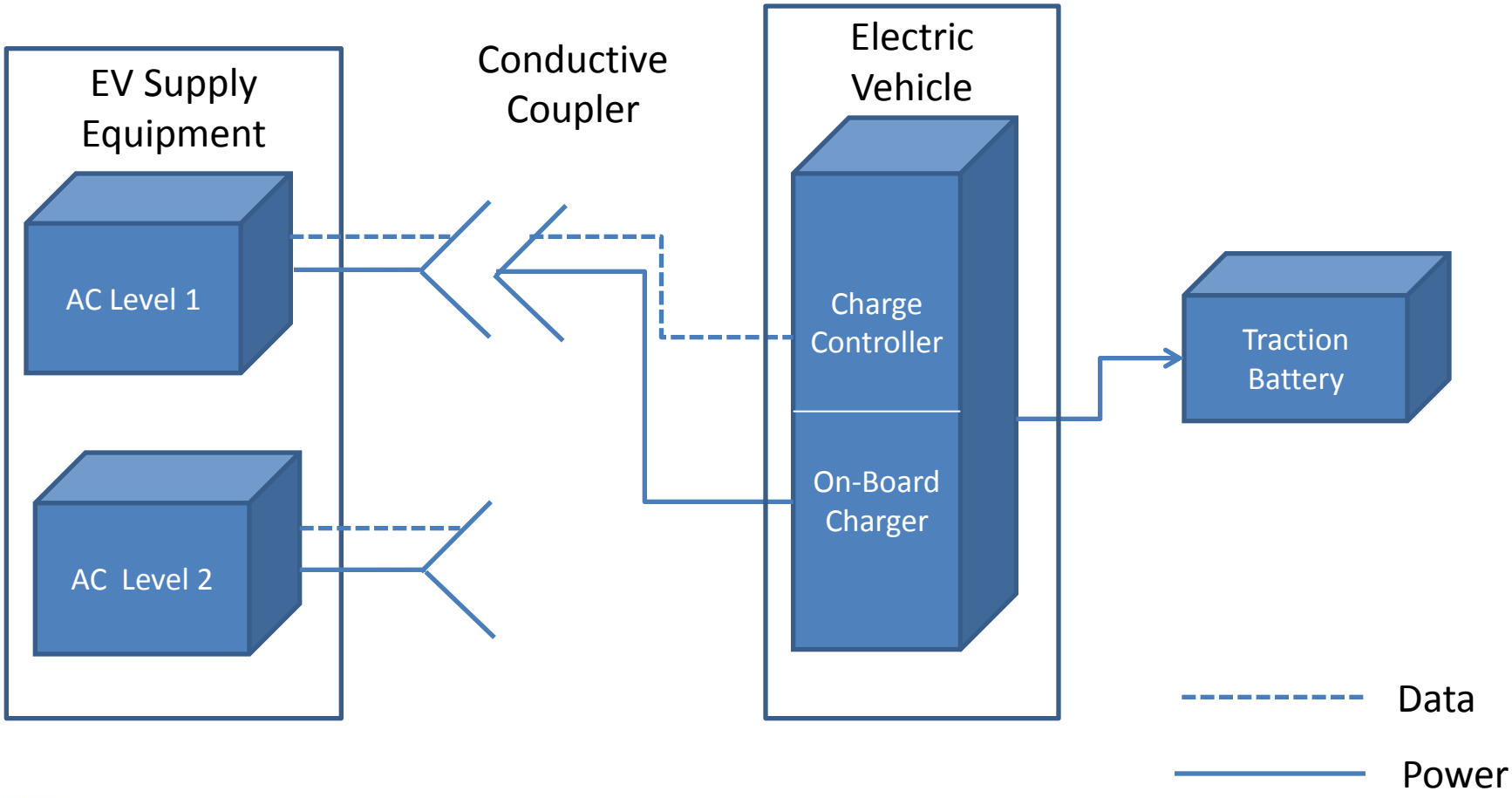

Charge Method Electrical Ratings (North America)(SAE J1772)

Charge Method	Nominal Supply Voltage (Volts)	Maximum Current (Amps-continuous)	Branch Circuit Breaker rating (Amps)
AC Level 1	120 V AC, 1-phase 120 V AC, 1-phase	12 A 16 A	15 A (minimum) 20 A
AC Level 2	208 to 240 V AC, 1-phase	<= 80 A	Per NEC 625
DC Charging	Under Development		

Electric Vehicle and Plug in Hybrid Electric Vehicle Conductive Charge Coupler- J1772

- Control Pilot and Data
  - Control pilot functions
    - Verification of vehicle connection
    - Indication of EVSE standby state
    - Indication of EVSE state- ready to supply energy
    - Indication of EV/PEV state- ready to accept energy
    - Checking of the EVSE current capacity
    - Verification of Equipment Grounding Continuity

Electric Vehicle and Plug in Hybrid Electric Vehicle Conductive Charge Coupler- J1772

- Proximity Detection
- Can be used to provide a signal to activate the EV/PEV charge controller and engage the EV/PEV drive interlock system
- Can also be used to provide a signal in the vehicle charge control strategy to help reduce electrical arcing of the coupler during disconnect
- Digital Data Transfer
- Required for the DC charging and must be established between the EVSE and the vehicle before charging
- Optional for AC level 1 & 2 charging
- Under development

Electric Vehicle and Plug in Hybrid Electric Vehicle Conductive Charge Coupler- J1772

- General EV/PHEV Requirements
- General EVSE Requirements
- Coupler Requirements
- Charge Status Indicator
- Connector/Vehicle Inlet Optional Marking

Communication between Plug-in Vehicles and the Utility Grid- J2847-1

- Primary purpose is grid optimized energy transfer for plug-in electric vehicles
- Supports the forward power flow (FPF) energy transfer from the grid to the vehicle

J2847/1- Messages

Identifications	Energy Requests	Timing Information
• Vehicle ID • Customer ID • EUMD ID • Communications Authenticated • Smart PEV Present • EVSE Override Request • EVSE ID • Premises ID	• Energy Request (amt) • Power Request (rate) • Energy Available(amt) • Power Available(rate) • Power Schedule • Energy Delivered (charge kWh)	• Time Charging to Start • Time Charging to End • Anticipated Charge Duration • Time Charge is needed • Charging Profile • Actual Charge Start Time
Pricing	**Load Control**	**Vehicle Info/Status**
• Request Scheduled Prices • Publish Price • Define Rate Time Period • Price for Rate Time Period • Price for Rate Time Period Info	• Load Control • Cancel Load Control • Report Event Status Request • Report Event Status Response • Request Scheduled Events	• Time at Connection • Battery SOC Start • Battery SOC End • Battery SOC Actual • Vehicle Type • Usable Battery Energy • Customer Mode Preference

Use Cases for Communication between Plug-in Vehicles and the Utility Grid- J2836-1

- Rationale behind this standard is to identify the equipment/system elements and the interactions to support grid-optimized AC or DC energy transfer for plug-in vehicles
- Main system elements include vehicle's rechargeable energy storage system (RESS), power conversion equipment, utility meter, optional advisory sub-meter (EUMD),load management system, equipment for control, monitoring and communication

Use Cases for Communication between Plug-in Vehicles and the Utility Grid- J2836-1

- **Top Level Use Cases**
  - PEV0- Customer Attributes
  - PEV1- Utility provides services to Plug-in Electric Vehicle
  - PEV2- Customer connects Plug-in Electric Vehicle to Premise Energy Portal
  - PEV3- Customer enrolls in a PEV Demand Side Management Program

Use Cases for Communication between Plug-in Vehicles and the Utility Grid- J2836-1

- **Detail Use Cases**
- Enrollment/General Registration
- U1-Time of Use Program (TOU)
- U2-Discrete Event Program
- U3-Real Time Pricing Program (RTP)
- U4-Critical Peak Pricing (CPP)
- U5-Optimized Energy Transfer

Why

- S1-Cordset EVSE (Level 1)
- S2-Premise Level (Level 2)
- S3-Premise EVSE that includes the DC charger

How

Detail Use Cases…Contd.

- L1-Customer connects PEV at Home (Premise)
- L2-Customer connects PEV at another Home Premise and within the Customer's Home Territory
- L3-Customer connects PEV outside Home Territory
- L4-Customer connects PEV at Public Location

Where

- PR1- Charge the PEV
- PR2- Discharge the PEV
- PR3- Diagnostics
- PR4-VM Specific

What

Use Cases Summary (SAE J2836/1)

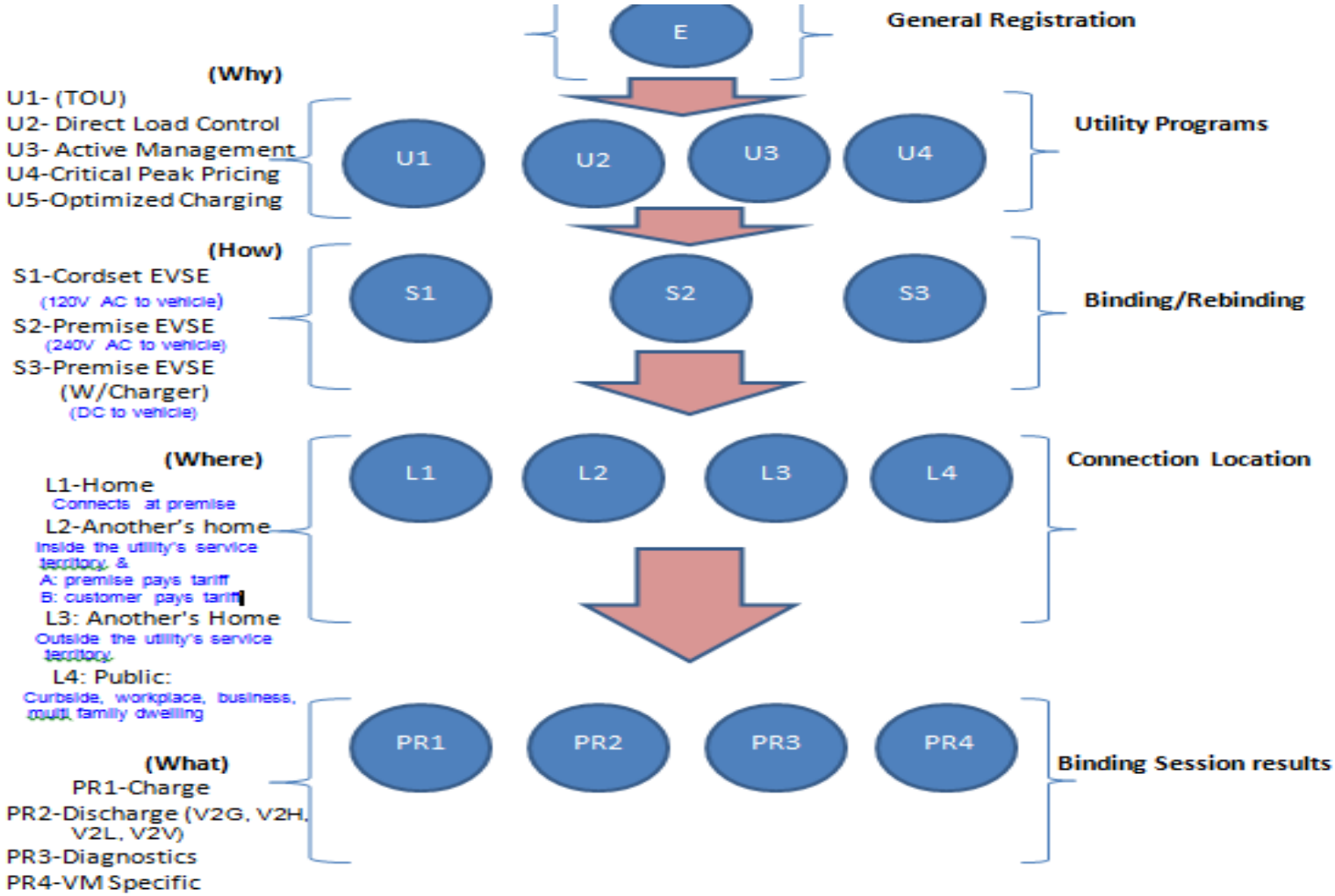

OTHER SAE STANDARDS

- Communication between Plug-in Vehicles and off board DC Charger-**J2847/2**
- Use Cases for Communication between Plug-in Vehicles and off board DC Charger-**J2836/2**
- Communication between Plug-in Vehicles and the Utility Grid for Reverse Power Flow-**J2847/3**
- Use Cases for Communication between Plug-in Vehicles and the Utility Grid for Reverse Power Flow- **J2836/3**
- Power Line Carrier Communications for Plug-in Electric Vehicles-**J2931/1**
- In-band Signaling Communication for Plug-in Electric Vehicles – **J2931/2**
- Wireless Charging of Electric and Plug-in Hybrid Vehicles-**J2954**

Thank You!