United States Patent	***5,674,415***
Leong et al.	***October 7, 1997***

METHOD AND APPARATUS FOR REAL-TIME WELD MONITORING

Abstract

An improved method and apparatus are provided for real-time weld monitoring. An infrared (IR) signature emitted by a hot weld surface during welding is detected, and this signature is compared with an IR signature emitted by the weld surface during steady-state conditions. The result is correlated with weld penetration. The signal processing is simpler than for either ultraviolet (UV) or acoustic techniques. Changes in the weld process, such as changes in the transmitted laser beam power, quality, or positioning of the laser beam, change the resulting weld surface features and temperature of the weld surface, thereby resulting in a change in the direction and amount of IR emissions. This change in emissions is monitored by an IR-sensitive detecting apparatus that is sensitive to the appropriate wavelength region for the hot weld surface.

Inventors: **Leong; Keng H.** (Lemont, IL); **Hunter; Boyd V.** (Bolingbrook, IL)

Assignee: **The University of Chicago** (Chicago, IL)

Appl. No.: **589857**

Filed: **January 22, 1996**

Claims

What is claimed is:

1. A method for real-time weld monitoring comprising the following steps: detecting an IR signature emitted by a hot weld surface during welding; comparing said detected IR signature with an IR signature emitted by the weld surface during steady-state conditions; and correlating said compared values with the penetration of the weld; and wherein said step of detecting said IR signature includes the steps of detecting change in the direct current component of a detected signal responsive to said emitted IR signature; said direct current component used in said comparing and correlating steps to identify weld penetration.
2. A method for real-time weld monitoring comprising the steps of: detecting an IR signature emitted by a hot weld surface during welding; comparing said detected IR signature with an IR signature emitted by the weld surface during steady-state conditions; and correlating said compared Values with the penetration of the weld; and detecting change in the alternating current component of a detected signal responsive to said emitted IR signature, and utilizing said detected change in the alternating current component of the detected signal for correlating with the weld width and weld shape.
3. A method for real-time weld monitoring as recited in claim 2 wherein said step of detecting said IR signature includes the steps of providing an IR detecting apparatus at a selected position relative to the weld.
4. A method for real-time weld monitoring as recited in claim 3 wherein said IR detecting apparatus is provided at a selected position above the weld.

5. An apparatus for real-time weld monitoring comprising: means for detecting an IR signature emitted by a hot weld surface during welding; means for comparing said detected IR signature with an IR signature emitted by the weld surface during steady-state conditions; means for correlating said compared values with the penetration of the weld; means for detecting change in the alternating current component of a detected signal responsive to said emitted IR signature; and means utilizing said detected change in the alternating current component of the detected signal for correlating with the weld width and weld shape.
6. An apparatus for real-time weld monitoring as recited in claim 5 further include means for generating an alarm signal related to said detected IR signature.
7. An apparatus for real-time weld monitoring as recited in claim 6 wherein said means for detecting said IR signature include detecting means responsive to said IR emissions; means for restricting a field of view of said IR emissions responsive detecting means and means for aims said IR emissions responsive detecting means.
8. An apparatus for real-time weld monitoring as recited in claim 6 wherein said comparing means and said correlating means comprise a digital signal processing unit.
9. An apparatus for real-time weld monitoring as recited in claim 6 further include means for displaying a signal related to said detected IR signature.

Description

Background of the Invention

1. Field of the Invention

The present invention relates to an improved method for weld monitoring, and more particularly to an improved method and apparatus for real-time monitoring of an IR signature of a weld pool to identify a predetermined weld parameter, such as, a weld pool depth, by using an IR detector.

2. Description of the Prior Art

Monitoring and control of the welding process is important to the production of a quality product. Laser welding in the keyhole mode is normally used to produce high-aspect-ratio weld joints at high speed with low heat input and distortion to the rest of the workpiece. This type of welding is called keyhole because of the geometry formed in the weld area of metal as it is being welded. A plasma is formed from the interaction of the intense laser beam with a shield gas and the metal atoms vaporized from the molten pool. Spectral emissions of the plasma are concentrated in the UV and visible wavelengths, whereas IR radiation is characteristic of the hot molten pool. The intensity of the plasma is affected by the ionization potential and the aerodynamics of the shield gas. For example, helium with its higher ionization energy will tend to produce a less intense plasma than argon. The plasma absorbs the laser beam energy and affects the coupling of the laser beam to the weld pool. The plasma intensity is a power function of the wavelength of the laser beam. A CO_2 laser (10.6 μm) beam will produce a more intense plasma than a Nd:YAG laser (1.06 μm) beam, where plasma problems are usually not very significant. In CO_2 laser welding, cross-jet systems are often used to minimize the plasma and improve coupling of the beam to the workpiece.

Laser beam welding also produces a characteristic acoustic emission, a buzzing sound, or timbre well known to experienced welders, when there is good coupling of the workpiece. These characteristic photonic and acoustic emissions during keyhole laser welding are affected by the process parameters of beam power and intensity, shield gas, geometry, and material properties.

A variety of known sensors are used to monitor emissions produced by keyhole laser beam welding. Photodiodes and thermal detectors are used to detect emissions from UV to IR. Acoustic sensors or microphones can be used to detect sound from the keyhole welding. In addition to the various sensors, camera systems have been used to visually monitor the size and shape of the weld pool, but visual observation of the weld pool is hard to correlate to weld quality.

Infrared pyrometry is an effective nonintrusive method to sense temperature. This method however, senses only temperature and does not provide any information on the width or shape of the weld surface. Temperature sensing will detect abnormalities only when there is a substantial change in temperature, such as when there is a loss in beam power. Other known commercial acoustic sensors have been shown to work well in the laboratory. However, on the shop floor, where there is a great deal of other noise and a hostile environment surrounding the welding area, acoustic monitoring is compromised. The plasma formed during laser welding of metal emits a spectra that is characteristic of the shield gas used and the vaporized metal atoms from the alloy being welded. The intensity of the radiation tends to be concentrated in the UV and visible spectrums. Monitoring of the condition or stability of the plasma is normally obtained by using UV photodiodes with a fast response. The time-varying intensity of the UV radiation is monitored, but there are concerns about the coupling of the plasma to the weld itself. Alternatively, the hot molten pool emits a strong IR signal that can easily be monitored by IR photodetectors but has been correlated only with surface features. None of the above described known systems provide a satisfactory method of real-time weld monitoring for use on the shop floor and that can be operated by a technician with a minimum of training.

Known sensors suitable for detecting signals from the welding process are summarized in TABLE 1. The responsivity or bandwidth listed for each sensor is suited for the monitoring of different signal sources in the laser welding process. A number of parameters affect the practicality of each detection or monitoring scheme. The relative performance of the sensors listed in TABLE 1 is indicated in TABLE 2. The cost of the sensor and accessories required also should be considered. The complexity of the sensing methodology will affect the ruggedness and success of the monitoring technique. The configuration of the system, the number of components, and when filters and additional sources for illumination may be required also are constrained by the factory environment.

TABLE 1

Sensor	Bandwidth (μm)	Signal Source
GaP Photodiode	0.19 – 0.52	Plasma
Ge Photodiode + Si filter	1.0 – 1.9	Molten pool
InGaAs Photodiode	0.8 – 1.7	Molten pool
Thermal disk, thermopiles	UV – IR	All radiant sources
Microphone	0 – 20 KhZ	Keyhole
OCD camera	UV – near IR	Weld process
IR camera	IR	Hot material

TABLE 2—Relative Performance of Sensors Suitable for Monitoring the Welding Process

Sensor	Cost	Complexity	Data Processing
GaP Photodiode	Low	Low	Low
Ge Photodiode + Si filter	Low	Low	Low
InGaAs Photodiode	Low	Low	Low
Thermal disk, thermopiles	Low	Low	Low
Microphone	Low	Low	Medium
OCD camera	Medium	High	High
IR camera	High	High	High

Reliability under adverse conditions of temperature, humidity, and environment also should be considered. Most of the above listed sensors capture radiant energy from the weld process. Consequently, windows need to be kept clean from ambient aerosols and splatter from the weld pool. This is usually achieved with a particle-free, dry gas purge used together with a mechanical shroud design. In addition, pointing accuracy and stability are required for reliable sensing. The photodiode sensors, thermal detectors, and microphone are relatively low cost as compared to charge-coupled device (CCD) cameras. Additional costs are incurred for required illumination techniques with lasers or strobes and filters. Infrared cameras are the most expensive but do not require illumination or filters for examining the weld pool since the detector

array is not sensitive to the plasma. Also camera systems produce an enormous amount of data, and computerized vision capabilities are expensive and not very practical at the current level of technology. However, simplified vision systems using CCD cameras have been used for seam tracking and weld width monitoring.

CCD camera systems can be configured to provide vision data on the welding process. In particular, with the use of filters and external illumination (lasers or strobes), the blinding effect of the plasma can be overcome, and a relatively clear picture of the weld being formed and the weld pool can be obtained. These systems are particularly useful for troubleshooting where direct viewing of the weld process is necessary to determine the cause of a particular problem. For example, when wire feeding is used, the ability to see the wire, its location, and the melting process is crucial. For complex weld geometries, a clear view of the weld process is also very useful in troubleshooting.

An alternative to using a CCD camera is the higher cost IR camera, which is sensitive to the hot weld pool but insensitive to the plasma. This type of IR camera uses platinum silicide or mercury cadmium telluride (MCT) sensing arrays that require cooling for efficient sensing. Filters and external illumination are not required since the array senses the intensity of IR emissions. This passive sensing method, although simpler to use, is not as flexible as the CCD camera system with external illumination, which can be used to control the brightness and produce stop action sequences.

Camera or vision systems, although ideal for troubleshooting, are not generally appropriate for indicating the quality of the weld. Although feasible, the enormous amount of data generated requires complex and rapid processing. Special systems have been devised to overcome this handicap to real-time weld monitoring. Seam tracking and seam width can be obtained by using an external laser (line) source to illuminate the weld or seam. The data obtained by the CCD cameras of the reflected beam is then analyzed. The surface features can be determined with the aid of an expert system. The additional complexity in attempting to interpret the data for weld surface features increases the cost and impairs marketability of such a monitoring system.

The hot molten pool produced during welding has a characteristic temperature that is affected by the process parameters in addition to the metal properties. The temperature range is between the melting and boiling temperatures of a particular metal. For a particular weld process, when a good weld is produced and the process parameters are invariant, the temperature of the molten pool will tend to be relatively constant. Variations at the start and end of the weld can be expected and when the workpiece metal thickness changes, varying the heat sink. Infrared pyrometry is a particularly efficient method to sense temperature noninstrusively. This sensing method is based on the change in IR emissions of a body with temperature. The spectra of the radiation emitted by a body is determined by its emissivity. The peak intensity of this spectrum is a function of the temperature and the associated wavelength decreases with temperature. IR sensors and filters are used for maximum sensitivity at different temperature ranges. For example, a MCT detector, or a thermopile detector with filter, may be used to sense the radiation in the 8- to 14-μm region for temperatures less than 800°C, whereas a photodiode sensitive to the 1-μm wavelength may be more appropriate for high-temperature applications. A fiber optic cable can be used for near IR wavelengths when the sensor needs to be positioned in a less demanding environment.

Infrared pyrometry senses only temperature and does not provide information on the width of the weld. Temperature sensing normally will detect abnormal conditions when there is a

substantial decreased speed, which causes a temperature increase. Surface features may be detected if, for example, humps cause a change in surface temperature.

Many researchers have examined the acoustic signals generated during welding to determine their suitability as indicators of the quality and penetration of the weld. In steady state, the primary source of the acoustic signals is the vapor emissions into the keyhole from the molten metal. The spectrum of the acoustic signals tends to change with a higher intensity beam that generates a deeper keyhole. Other phenomena, such as plasma ignition and workpiece surface features, also affect acoustic signals. When full penetration is achieved, the vapor has another route to escape through the bottom of the weld, and a change in the acoustic signal results. The positioning of the detector is also important since the strength of the acoustic signal decreases inversely with the square of the distance from the source to the acoustic detector.

Since the acoustic signals are affected by the power and intensity of the beam and the material and geometry of the workpiece, the acoustic spectrum needs to be monitored. For a particular setup, the presence of full penetration may be indicated by the intensity of the signal in a particular bandwidth, or the quality of the weld may be indicated by a characteristic spectra. Because of the variability of these effects and the number of parameters, neural networks have been used to analyze acoustic signals to indicate defective welds.

The acoustic sensing method is still in the development stage, but good results have been obtained in the laboratory environment. In a factory floor environment, acoustic interferences from mechanical noises for various sources would be expected and would impair the performance of even well-trained neural networks to intelligently distinguish a bad weld from the many interfering and transient background acoustic noises. A typical spectrum of the background noise may exist, and acoustic sensing may perform well if the signal-to-noise ratio is robust. The robustness of the sensor in the manufacturing environment also must be considered.

A variation of the acoustic sensing method described above is the acoustic technique that has been used to carry out post-weld evaluation. A laser beam can be used to excite the weld immediately after it is formed. An acoustic transducer can be used to obtain the signals produced from the excitation to determine weld quality. Complications in coupling for a moving workpiece result when using a standard acoustic transducer. One solution, albeit complex, is the use of nonintrusive techniques such as another laser beam to sense the vibrations produced at the surface.

UV detection has been used with the plasma formed during laser welding of a metal that emits spectra characteristic of the shield gas used and the vaporized metal atoms present in the alloy being welded. The intensity of the radiation tends to be concentrated in the UV and visible regions. Monitoring of the condition or stability of the plasma is normally obtained by using UV photodiodes with fast response time, typically less than 0.1 ms. The time-varying intensity of the UV radiation is monitored. Fast Fourier transforms are used to analyze the spectrum of the signals under different weld conditions. A good weld is characterized by a particular spectrum, whereas an abnormal condition is indicated by a change in the intensity of part of the spectrum. As in acoustic sensing, the principle of analysis and correlation with weld quality is similar, and full penetration of the weld can be detected by monitoring above the weld. Thermal or IR detectors can be used to easily detect the presence of full penetration if the detector can be located on the underside of the weld; however, this is frequently inaccessible.

Neural networks have been used with a UV monitoring system to identify a threshold level where a weld is identified as a bad weld. Neural networks have been tested in an auto welding application by the Fraunhofer Institute for Laser Technology, in Aachen, Germany. A high probability of detecting full penetration welding and of detecting a gap wider than 0.2 mm have been achieved. Acoustic sensing would be expected to have a similar degree of reliability but subject to the presence of background noise on a factory floor. However, it should be noted that retraining of the neural network must be performed for each application, and the above described level of success of the UV monitoring system was achieved with highly trained scientists and engineers who developed the system. A somewhat similar UV monitoring system without the benefit of a neural network has been available through Weidmuller Sensor Systems of McHenry, Ill., U.S.A.

W. Steen's group at the University of Liverpool, England, has shown that increased fault sensing can be obtained by using both plasma and acoustic sensing with an expert system. There a plasma charge sensor and acoustic emission nozzle were used.

It is an object of the present invention to provide an improved method for weld monitoring.

It is another object of the present invention to provide such an improved method that provides real-time monitoring of an IR signature of a weld to identify a predetermined weld parameter, such as weld penetration.

It is another object of the present invention to provide such an improved method that provides real-time monitoring of an IR signature of a weld to identify a predetermined weld parameter, such as weld surface feature.

It is another object of the present invention to provide such an improved method that uses an IR detector and provides reliable and effective operation.

It is another object of the present invention to provide such an improved method and improved monitoring system providing robust results in that the number of good welds tagged as bad is minimized and where the system is relatively simple to operate without requiring elaborate training or adjustments.

It is another object of the present invention to provide such an improved method and system that overcomes many of the disadvantages of prior art arrangements.

Summary of the Invention

In brief, these and other objects and advantages of the invention are provided by an improved method and apparatus for real-time weld monitoring. An IR signature emitted by a hot weld surface during welding is detected, and this signature is compared with an IR signature emitted by the weld surface during steady-state conditions. The result is correlated with weld penetration. Changes in the weld process, such as changes in the transmitted laser beam power, quality, or positioning of the laser beam, change the resulting weld surface features and temperature of the weld surface, thereby resulting in a change in the direction and amount of IR emissions. This change in emissions is monitored by an IR sensitive detecting apparatus that is sensitive to the appropriate wavelength region for the hot weld surface.

Brief Description of the Drawings

The present invention together with the above and other objects and advantages may best be understood from the following detailed description of the preferred embodiments of the invention illustrated in the drawings, wherein:

- FIG. 1 is a schematic representation of a weld to be monitored and a detector in accordance with the present invention;
- FIG. 2 is a schematic representation similar to FIG. 1 illustrating a bad weld;
- FIG. 3 is a more detailed schematic representation of the detector of FIG. 1 in accordance with the present invention;
- FIG. 3A is a block diagram representation of a monitoring system including the detector of FIG. 1 arranged in accordance with the present invention;
- FIG. 3B is a flow chart illustrating sequential functions performed by the monitoring system of FIG. 3A;
- FIGS. 4-11 are charts illustrating operations of the monitoring system of FIG. 3A including the detector of FIG. 1 in accordance with the present invention.

Detailed Description of the Preferred Embodiment

Having reference now to the drawings, in FIGS. 1, 2, and 3 there is shown a detector or sensor generally designated by the reference character (10) in accordance with the invention. The detector (10) monitors an IR signature of a weld or molten weld pool (12). The hot molten weld pool (12) emits an IR signal that is detected by an IR photodetector (14) of the detector (10). An alternating current (AC) intensity of the near IR (0.8-1.5 µm) signals provides an excellent indicator of the weld surface condition. The direct current (DC) magnitude of the detected signal indicates the penetration of the weld (12). The IR emissions detected by detector (10) are substantially controlled by the temperature and area of the surface of the weld pool (12) including the intense plasma in the keyhole of the weld (12).

In accordance with a feature of the invention, monitoring of the weld pool (12) is based on an assumption that a unique or invariant signature is characteristic of a good weld. Variations in the process parameters, such as beam power or traverse speed, that may impair the quality of a weld change the monitored IR emissions detected by the IR detector (10). For invariant conditions, the output signal of the sensor (10) is essentially constant. Otherwise, the signal received by the detector (10) varies with the emitting surface changes in geometry of the weld pool (12). Changes in weld width, humping, or undercut will result in variations in output of the detector (10). However, it should be understood that the power received by the IR sensor (10) is not a unique function of the weld surface geometry. The absolute value of the power received is a function of the distance or separation of the detector (10) from the weld (12) and the field of view of the detector (10) in addition to weld surface features and temperature. Relative changes in detector output signal indicate a change in the weld process for a fixed detector position, absolute output signal values are calibrated to indicate changes in a weld parameter, such as weld width. Higher irradiance produced by the laser beam is required for deeper weld penetration. This higher irradiance produces a hotter weld pool emitting higher intensity IR signals that causes an increase in the detector output signal.

Monitoring the IR signature from the weld pool (12) provides a more direct method of monitoring the surface features of the weld, and of weld quality as compared with the monitoring of the plasma or the acoustic emissions. It may be understood that monitoring the signatures or emissions produced by the welding process is only a qualitative indication of the weld quality. Changes in the weld process, such as changes in the transmitted laser beam power, quality or characteristics, or positioning, will tend to change the surface features of the weld pool in terms of the width and shape, thereby resulting in a change in the direction and amount of IR emissions. This overall change in IR emissions is monitored by the IR photodiode (14), which is sensitive to the appropriate wavelength region of the IR emissions. By sensing the IR emissions only, the cause of the change may not be determined but the change will certainly be detected. It should be noted that a similar problem is encountered in using UV or acoustic sensing techniques so that it may be difficult to properly discriminate a bad weld from a good one. However, the level of data processing is less complex and the degree of difficulty in discrimination may be correspondingly lower using the IR detector (10) of the invention.

As shown in FIG. 1, detector (10) has a particular field of view for the collection of the IR emissions from the weld (12). In use, the detector (10) is pointed such that the field of view covers more than the width of the weld (12) to allow for aiming inaccuracies. FIG. 1 illustrates that part of the IR emission collected by the detector (10) for the case of the good weld. A poor-quality weld (12) as illustrated in FIG. 2 has a surface such that most of the emissions are pointed away from the detector (10), resulting in a decrease in the sensor output. The configuration of the detector's field of view and the geometry of the weld surface is such that the sensor output will be affected by the angular position of the detector. Mounting positions near normal or less than 45 degrees from normal are more sensitive to most weld surface changes compared to lower elevations.

Referring to FIG. 3, the weld monitoring detector (10) includes the IR photodiode (14) mounted in a collimator, as shown. An important feature of the weld monitoring detector (10) is that the photodiode (14) is located far back in the device both for protection from splatter and to limit the area sensed to the approximate area of the width of the weld (12). The photodiode (14) is operated in a photovoltaic mode, providing output voltage proportional to the power received. An integrated circuit (IC) socket (15) mounts the IR photodiode (14). The field of view of the detector (10) is restricted by the three collimated apertures (16A, 16B, and 16C). The spot size viewed is provided such that the weld width and the uncertainty in aiming of the detector (10) is accommodated. An inlet (18) to the apertures (16A, 16B, and 16C) labeled LIGHT is designed to not obscure the narrow field of view and to shield the first aperture from splatter. A length of the limiting apertures between apertures 16A and 16B is indicated by an arrow labeled A. A gas inlet (not shown) may be provided between two of the apertures, such as apertures 16A and 16B, to allow the addition of clean purge gas to keep the sensor window clean. Visual aiming of the detector (10) can be performed using a gunsight tab (20) as shown. Also improved aiming accuracy can be provided by laser beams.

The design of detector (10) provides aiming and field of view in a rugged compact package. In operation, the detector (10) is passive, requiring no external power sources. For detection in the near IR-bandwidth and hostile environments, fiber optics may be used such that the photodiode (14) can be placed in a remote location. A removable plug (22) is shown at an opposite end of the IR detector (10) from the light inlet (18) near the photodiode (14).

A IR photodiode (14) having an appropriate responsivity is selected for the sensor (10) on the basis of the temperature of the molten material of the weld pool (12). For example, for iron with

a melting point of 1535°C, the peak emission wavelength is around 1 μm and the appropriate IR photodiode (14) is an indium gallium arsenide (InGaAs) photodiode. Other photodiodes can be used, but a filter (not shown) may be required and can easily be incorporated in the current design of the detector (10). The detector provides for easy replacement of the sensor, and a standard connector such as BNC can be added for ease in hookup.

The illustrated design of IR detection (10) is arranged for easy mounting onto an available processing optics assembly (not shown). The detector (10) is located at a predetermined location, for example, 6 inches or further away from the weld pool (12), to minimize splatter. An optimal distance typically will depend on the field of view of the detector (10) and the noise level of the detection circuitry.

Referring to FIG. 3A, an output signal of the weld monitoring detector (10) is applied to a digital signal processor (DSP) (30) that has an associated memory (32). A display driver (34) operatively controlled by the DSP (30) provides a display signal to a display (36) that can be viewed by a user of the weld monitoring detector (10). An alarm 38 is coupled to the DSP (30) for generating an alarm, such as an audible signal to alert the user of the weld monitoring detector (10).

Referring to FIG. 3B, sequential functions performed by the DSP (30) are shown beginning at a block (300). The IR signature signal is detected as indicated at a block (302). Then the AC and DC components of the detected signal are identified as indicated at a block (304). The detected IR signature signal that includes the identified AC and DC components of the detected signal, is compared with a steady-state IR signature signal of the weld pool (12) as indicated at a block (306). Then the compared results are correlated to identify a weld width, shape and penetration as indicated at a block (308). The compared results with respect to the DC component of the detected signal are correlated to identify the weld penetration at block 308. The compared results with respect to the AC component of the detected signal are correlated to identify the weld width and shape at block 308.

In FIGS. 4-11, an output signal (left vertical axis) is shown relative to time (horizontal axis). A temperature reference is provided relative to the right vertical axis of the plots of FIGS. 4-7. The voltage output signal of the detector (10) is illustrated by a line labeled IR for comparison with the UV and pyrometer signals illustrated by lines labeled UV and PYRO. FIGS. 4-7 illustrate resulting output signals from the detector (10) for comparing the detector output signal from a good weld in FIGS. 4 and 5 with the detector output signal from welds that were not as good in FIGS. 6 and 7. The sequence of plots are shown in FIGS. 4-7 for progressively less ideal welds.

FIG. 4 illustrates the case of a good lap weld with full penetration characterized by relatively constant response from each sensor. Note that the pyrometer output signal had a relatively long characteristic response time of 200 ms. The temperature tended to increase gradually with time as the plate absorbed the energy from the laser beam. The long tails or decay portions of the plotted outputs should be ignored. The tails were caused by the circuit capacitance that has been essentially eliminated for the latest version or caused by the cooling of the edge of the weld pool (12).

FIG. 5 illustrates a partial penetration weld with variations in penetration. The outputs of the sensors have slightly more variability than in FIG. 4. The IR sensor output has slightly lower values, whereas the UV sensor output is essentially the same as in the previous case.

FIG. 6 illustrates a varying partial penetration weld with some humping. The outputs here have increased variability. The responses of the UV and IR sensors correlate well, whereas the

pyrometer output has an inverse correlation. This temperature change is not unexpected for a surface that protrudes from the weld pool and subject to increased cooling.

FIG. 7 illustrates a varying partial penetration weld with severe humping. The outputs of the sensors have the same correlation characteristics as in FIG. 6. The IR sensor (10) is the most sensitive to the degree of the humping.

The data indicates that the output of a UV photodetector tends to track that of the IR detector (10) for most weld conditions. For example, the output of both detectors oscillated when humping of the weld occurred. A decrease in beam power would result in decreased output of the detectors. However, the IR detector (10) was found to be substantially more sensitive to weld surface and possibly penetration changes than the UV detector. The temperature readings obtained with the pyrometer correlated inversely with the IR photodiode response for the case of humping while no good correlation was obtained for other surface changes. Most pyrometers have a significant response time that may prevent full data acquisition. Hence, the data obtained confirm the expectation that IR detection is a more direct and sensitive indicator of the weld surface geometry.

In FIGS. 8 and 9, the response of the weld monitoring IR detector (10) to changes in weld width and surface features are illustrated. FIG. 8 shows a response of the weld monitor (10) for the length of the weld for lap welding aluminum-bearing stainless steel (SR12). The voltage plotted is the output of the IR detector (10) amplified by a factor of 10 and filtered at 50 Hz. Weld defects were simulated by changing the workpiece geometry, for example, gap between plates, and changing the air gap between the top and bottom plates by using 304 SS slim stock between the plates on the right hand side. The beam power was kept constant (±5%). A lap weld with a relatively good surface geometry is characterized by a relatively constant DC voltage output from the detector (10). The fluctuations of the signal frequencies >10 Hz were primarily from the digitization noise in the data acquisition system, other electronic noise present and normal fluctuations in emissions from the weld pool. The drop in the DC level of the signal at about 2.3 seconds was caused by the weld dropout at the gap between the two sets of plates that were butted together. The detector signal output returns to the previous level after the "gap" defect. The presence of an air gap caused by the shimming affected the weld because of the molten pool dropping into the air gap resulting in a decrease in the weld width. A corresponding large drop in the detector output was obtained. The weld that was formed over the shim stock had an increasing undercut and a surface lower than the top of the bare material. A decreasing voltage output from the detector was obtained. In other tests a large AC component of the detector output was obtained under conditions of humping with the peak output corresponding to the humped surface and the minimum to depressed surface. Other tests also showed that the detector responded well to changes in the weld surface. It should be noted that the temperature of the weld pool also varied for the conditions measured and the responses of the detector were the result of the combined surface and temperature changes.

Referring to FIGS. 10 and 11, the response of the IR detector (10) to changes in weld penetration was tested on lap welds of 1018 steel on 1045 steel. Two types of steel were used because of availability and were not expected to be a factor in the tests. The power was varied with the weld speed kept constant to determine the change in the detector output. The changes in beam power used (4680-5160 W) simulated power fluctuations in the output of the laser or contamination of the optics caused by splatter. The response of the weld monitor to power is shown in FIG. 10. The output voltage for this case was obtained with a version of the weld monitor that had a wider field of view than previously used. The output voltage has a good linear

correlation with power. The output of the detector is plotted as a function of the weld penetration in FIG. 11. The data has more variability than in FIG. 10 but still indicates a linear response. Note that the output voltage change was only 10 mV, which is not a good signal-to-noise level. Improved response can be expected by using a larger field of view of the weld monitor and improving the digitization and electronic noise.

Although the present specification describes the use of the weld monitoring detector (10) with laser beam welding, it should be understood that the method of the invention is equally applicable to other types of welding.

While the present invention has been described with reference to the details of the embodiments of the invention shown in the drawing, these details are not intended to limit the scope of the invention as claimed in the appended claims.

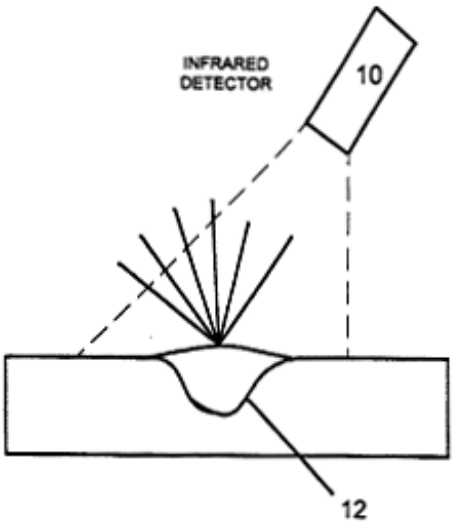

FIG.1

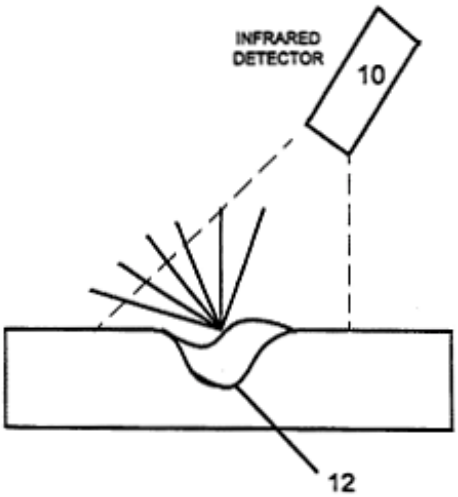

FIG.2

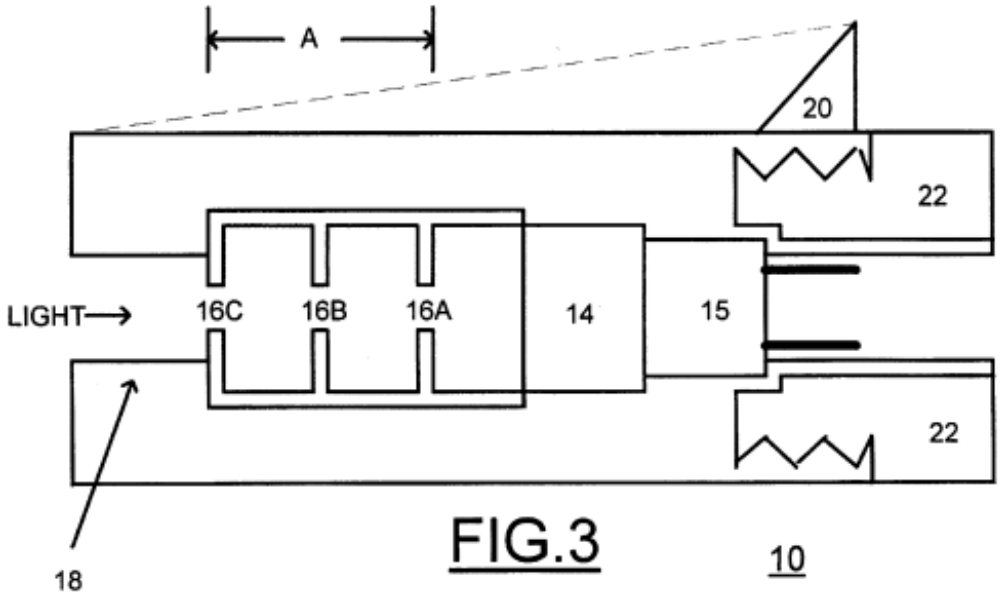
A
20
22
LIGHT
16C
16B
16A
14
15
22
18
10

FIG.3

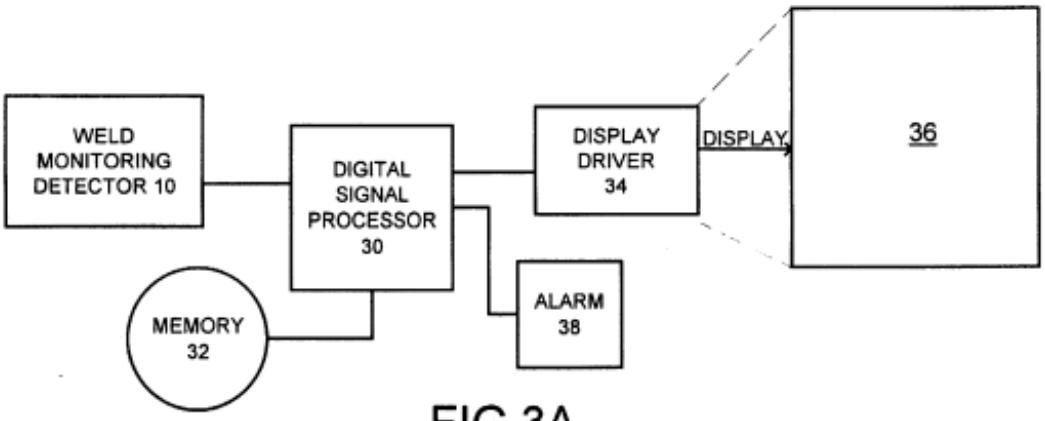
WELD MONITORING DETECTOR 10
DIGITAL SIGNAL PROCESSOR 30
DISPLAY DRIVER 34
DISPLAY
36
MEMORY 32
ALARM 38

FIG.3A

FIG.3B

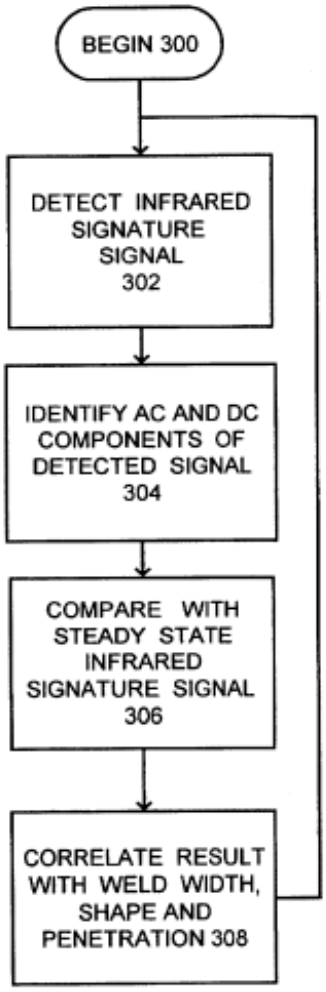
BEGIN 300
DETECT INFRARED SIGNATURE SIGNAL 302
IDENTIFY AC AND DC COMPONENTS OF DETECTED SIGNAL 304
COMPARE WITH STEADY STATE INFRARED SIGNATURE SIGNAL 306
CORRELATE RESULT WITH WELD WIDTH, SHAPE AND PENETRATION 308

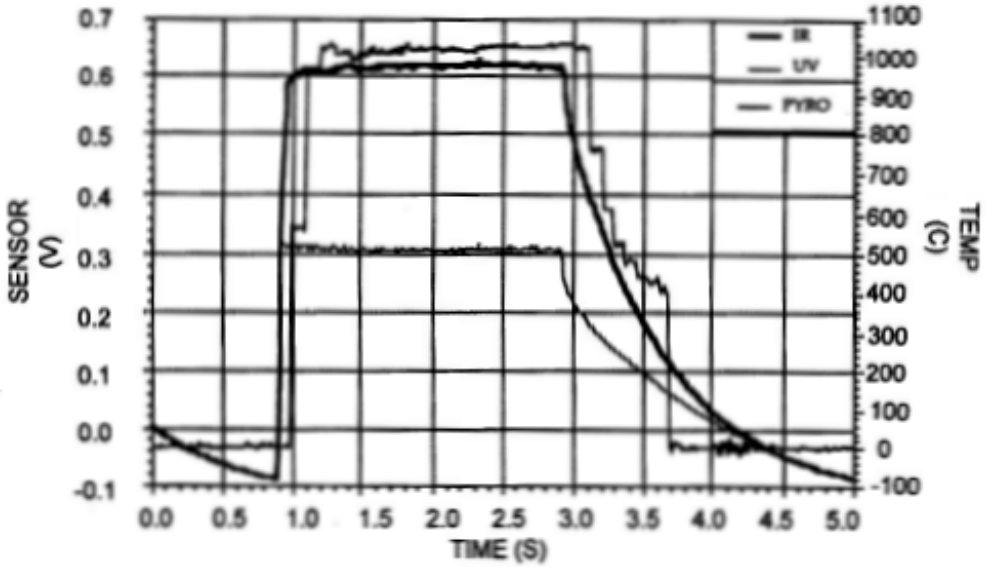
IR
UV
PYRO
SENSOR (V)
TEMP (C)
TIME (S)
0.7
0.6
0.5
0.4
0.3
0.2
0.1
0.0
-0.1
1100
1000
900
800
700
600
500
400
300
200
100
0
-100
0.0
0.5
1.0
1.5
2.0
2.5
3.0
3.5
4.0
4.5
5.0

FIG.4

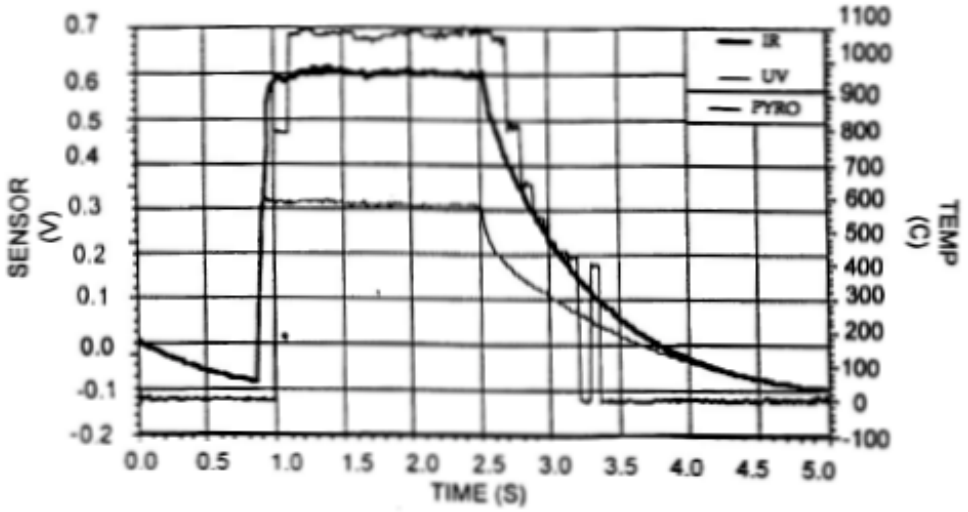
IR
UV
PYRO
SENSOR (V)
TEMP (C)
TIME (S)
0.7
0.6
0.5
0.4
0.3
0.2
0.1
0.0
-0.1
-0.2
1100
1000
900
800
700
600
500
400
300
200
100
0
-100
0.0
0.5
1.0
1.5
2.0
2.5
3.0
3.5
4.0
4.5
5.0

FIG.5

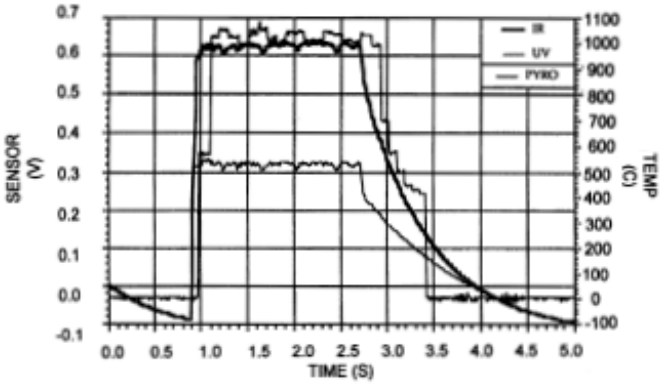

FIG.6

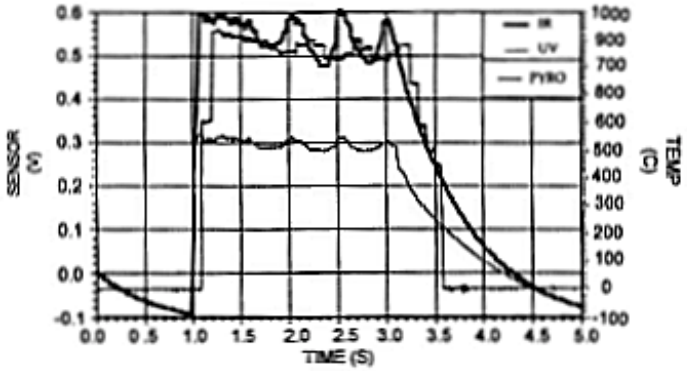

FIG.7

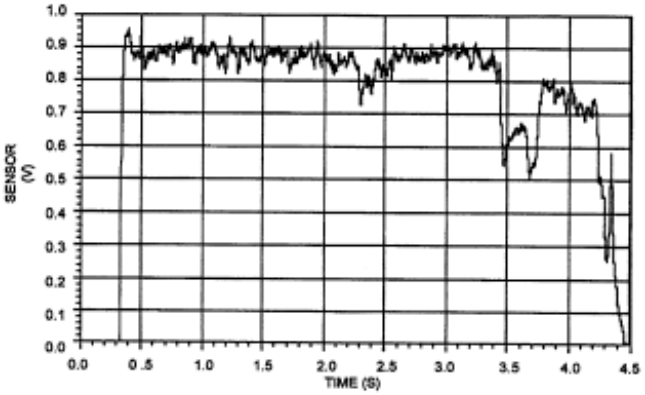

FIG.8

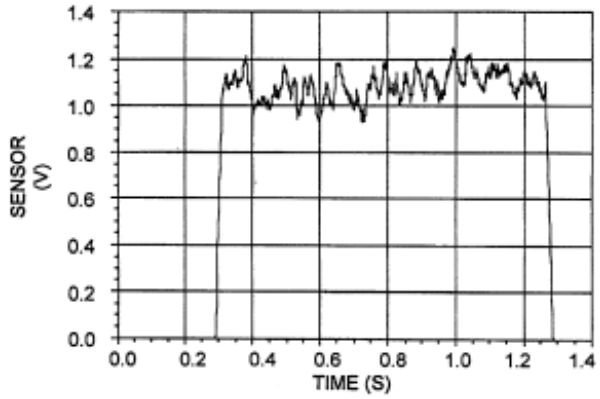

FIG.9

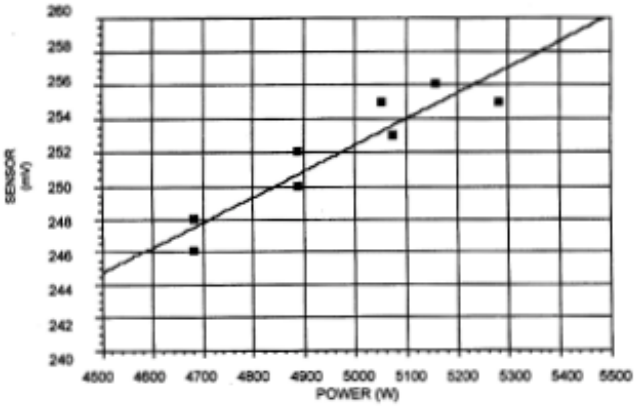

FIG.10

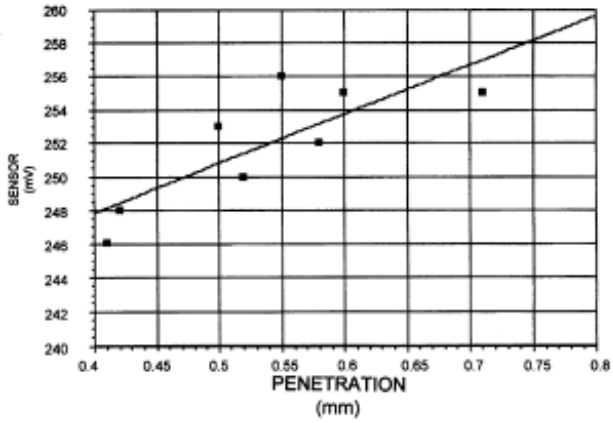

FIG.11