Magnetic Levitation and Propulsion Concepts

for a New Wind Tunnel Design

-A Feasibility Study*

Prepared For

NASA Langley Research Center

By

Donald M. Rote

Presentation

December 2, 1997

* Work sponsored by NASA Langley Research Center under NASA Purchase Order L-6607 to Argonne National Laboratory, United States Dept. of Energy

Center For Transportation Research
Argonne National Laboratory
9700 S. Cass Av.
Argonne Il 60439

Table of Contents

1. Introduction 3

1.1. Purpose of Study 4
1.2. Wind Tunnel Performance Requirements .....
1.2.1. Loads 4
1.2.2. Stability 4
1.3. Maglev System Design Requirements 4

2. Maglev Design Concepts For Transportation Applications 5

2.1. Attractive-Force-Based Systems 8
2.1.1. Suspension System Concepts 8
2.1.2. Compatible Propulsion Motor Designs 10
2.1.3. Examples of Maglev Systems Using Attractive-Force Suspension Systems 14
2.2. Repulsive-Force-based Systems 15
2.2.1. Suspension System Concepts 15
2.2.2. Compatible Propulsion Motor Designs 21

3. Design Configurations Suitable For New Wind Tunnel Designs 23

3.1. Overall Design Considerations 23
3.1.1. Cart Configuration 26
3.1.2. Control of Pitching and Other Moments 26
3.1.3. Duty Cycle 28
3.2. Candidate System Designs 29
3.3. Numerical Results of Preliminary Design Modeling Study 29

4. Comparison of Design Options 31

4.1. Basis of Comparison 31
4.2. Measure by Measure Comparison 32

5. Conclusions 42

Bibliography and References 44

Appendix A 49

1. Introduction

1.1. Purpose of Study

The purpose of this study is to conduct a preliminary investigation and evaluation of the potential use of magnetic levitation and propulsion technology in a wind tunnel application. It is envisioned that the results of this study could be used as a basis for a more detailed study in which the most promising concept(s) could be further developed.

In conventional wind tunnel testing, the test article is mounted on a "sting" and held stationary while the test media is forced over the model. The sting houses instrumentation to measure aerodynamic lift and drag and provides routing for instrumentation. Conventional wind tunnels also have costly drive systems which introduce flow disturbances.

It is desired to maximize Reynolds number ($Re = \rho VL/\mu$) in order to reduce scaling errors. To increase flight Reynolds number, the size of the test article can be increased, the test medium pressure can be increased, or the medium temperature can be reduced all to some practical limit. It is also of importance to have "quiet" flow, low disturbances in the medium, and precise model orientation with low vibration. The emphasis for the facility under consideration is for low speed (Mach 0.5 or less) high Reynolds number (> 50 million at Mach 0.3) capability.

It may be possible to overcome some of these limitations with a new type of facility. In such a facility the medium is captured by a tube with temperature and pressure closely controlled. The tube would have an internal diameter of about 20 feet with a length to diameter ratio of about 100. Temperatures as low as liquid nitrogen and pressures up to 5 atmospheres absolute are envisioned. The test article would be mounted on a cart which is propelled down a track at very precise speeds. The cart would utilize magnetic levitation for suspension with a linear motor for acceleration and deceleration. An acceleration/deceleration of about 3 g's would require a track length of about 2000 feet. In addition to the acceleration/deceleration forces, the cart would have to withstand force moments created by aerodynamic forces acting on the test article and cart. Depending on the cart design, it may also have to counteract a moment of the gravity force as well. The moment axis of the test article would depend on its orientation. Critical to testing would be speed control, article position stability, and vibration levels as these affect aerodynamic data fidelity.

1.2. Wind Tunnel Performance Requirements

The base performance requirements and loads for the facility are tabulated below.

1.2.1. Loads

1. Cart and test article weight	20 to 40 tons
2. Model aerodynamic drag force	10 tons
3. Model aerodynamic side force	3.5 tons
4. Model aerodynamic lift force	40 tons
5. Pitching Moment	40,000 ft-lb.
6. Rolling Moment	37,000 ft-lb.
7. Yawing Moment	20,000 ft-lb.
8. Pressure environment	0 to 5 atmospheres absolute
9. Temperature Requirements	-250 to 100 degree F
10. Speed	30 - 350 feet/second
11. Acceleration	up to 3 g's (depending on track length)
12. Minimum data collection period	≅ 2 s @ 350 ft/s

1.2.2. Stability

1. Steady State velocity	+/- 0.05%
2. Attitude stability	+/- 0.075 degree

1.3. Maglev System Design Requirements

In general, maglev systems designed for transportation applications consist of vehicle-borne and guideway-mounted components that provide the required lift, guidance, propulsion and braking forces. In addition, means to collect power for on-board uses, ensure fail-safe operation, and satisfy ride comfort criteria, i.e., control vehicle motions, are also required. In the design of maglev systems for transportation applications, emphasis is placed on low cost guideways, light weight vehicles, energy efficiency, and passenger comfort and safety.

For the wind tunnel application being considered here, maglev system designs must perform similar functions. However, the performance requirements are quite different and pose substantially greater design challenges. These include:

1. Design of a vehicle (cart and test article support structure) that will not significantly disturb the medium at the test article.
2. Design of a lift and guidance system that will handle aerodynamic lift forces comparable in magnitude to the downward directed gravitational forces

normally accounted for in transportation system designs. It is desirable to permit the model to be oriented in any direction, which implies that the aerodynamic lift force may act upward, downward , or even sideways.

3. Design a suspension system that will allow the aerodynamic forces to vary during a test run. A pitch/pause model support system is currently being proposed in which pitch angles are adjusted during a run so that multiple data points can be efficiently obtained. The aerodynamic forces will, of course, change with the pitch angle.
4. Design of a propulsion system including power conditioning equipment and physical space allocations for motor windings needed to provide total propulsion forces an order of magnitude greater than for conventional transportation applications.
5. Allowing for much larger torques or rotating moments than normally considered.
6. Consideration of critical component designs and materials properties suitable for low temperature applications.

Vehicle motion control, i.e., vibration control, for transportation and wind tunnel applications may turn out to be similar although the required suspension system stiffness for the latter case has yet to be determined.

Another consideration that should be borne in mind when addressing the design challenges listed above is that the geometries of the wind tunnel and transportation applications are significantly different. The former requires a relatively short straight guideway that fits in a cylindrical enclosure , whereas the latter rests on the ground or on an elevated structure that is potentially thousands of miles long and requires the use of curves, grades, switch tracks and crossovers. This suggests that suspension and propulsion system designs may be considered for the former that would be intolerably expensive or otherwise unsuitable for the latter.

Maglev system design concepts that have been developed for transportation applications are briefly reviewed in the following section. Adaptations of these design concepts suitable for wind tunnel application are considered thereafter.

2. Maglev Design Concepts For Transportation Applications

Magnetically-levitated (maglev) vehicles operate on guideways using non-contact, magnetic forces for supporting, guiding, propelling and braking functions. There are a number of different maglev vehicle system designs that have been developed in various countries and each offers its own set of features. The bulk of the literature in this field spans a period of about

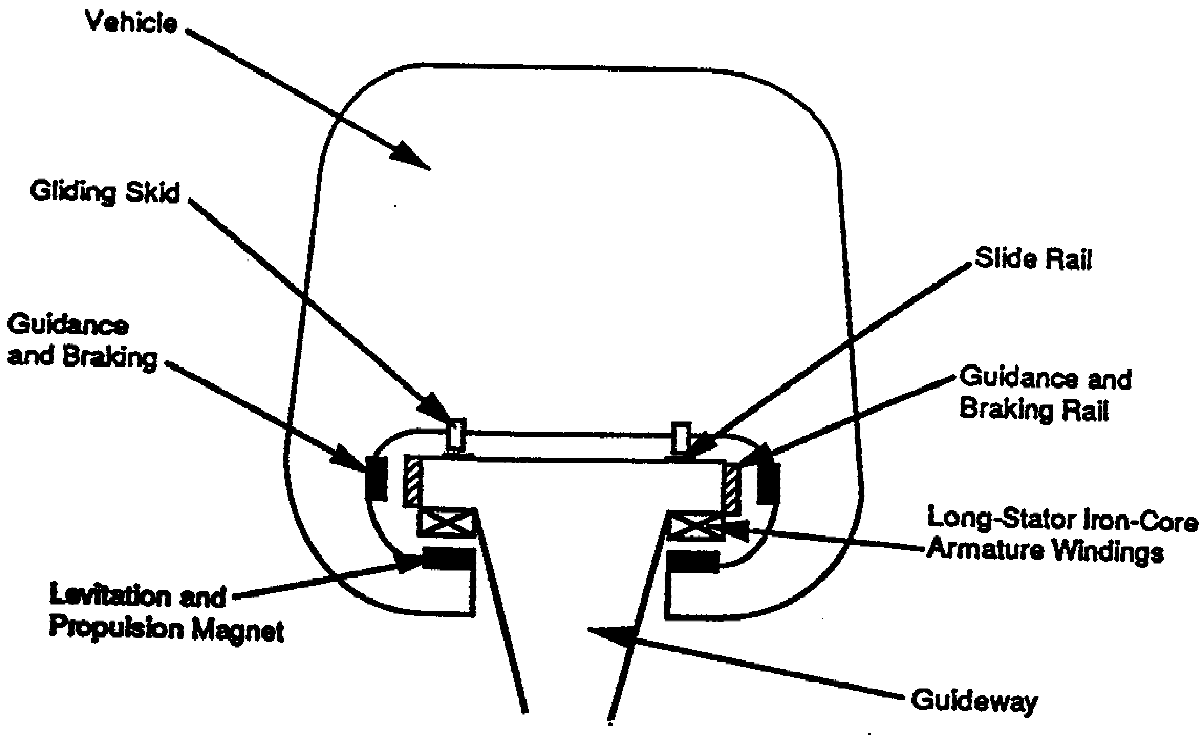

Figure 2.1 Attractive Force Suspension System
(Schematic of German Transrapid System)

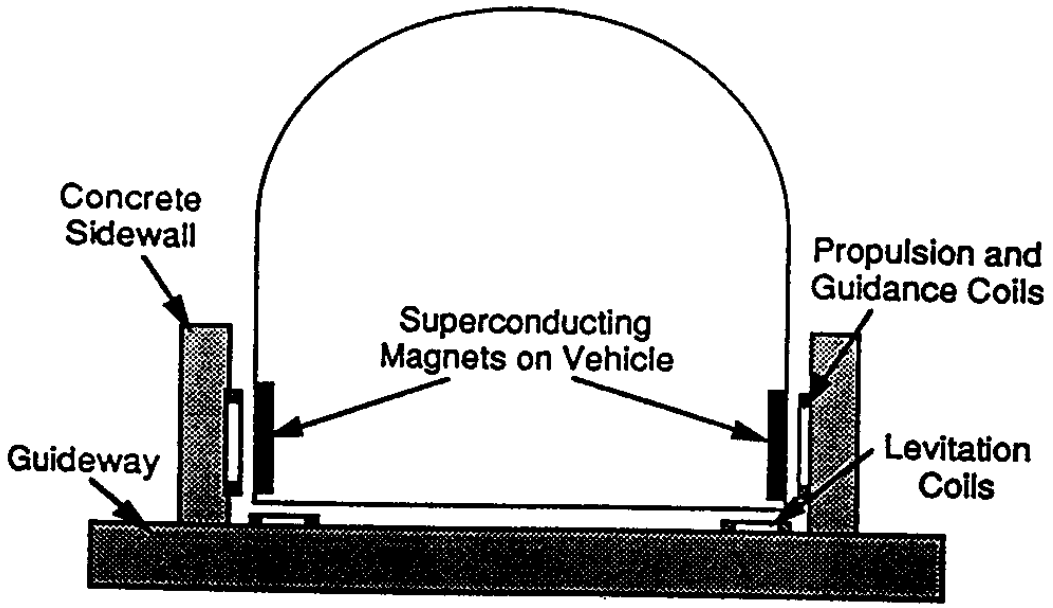

(a) Horizontally-mounted levitation coil system

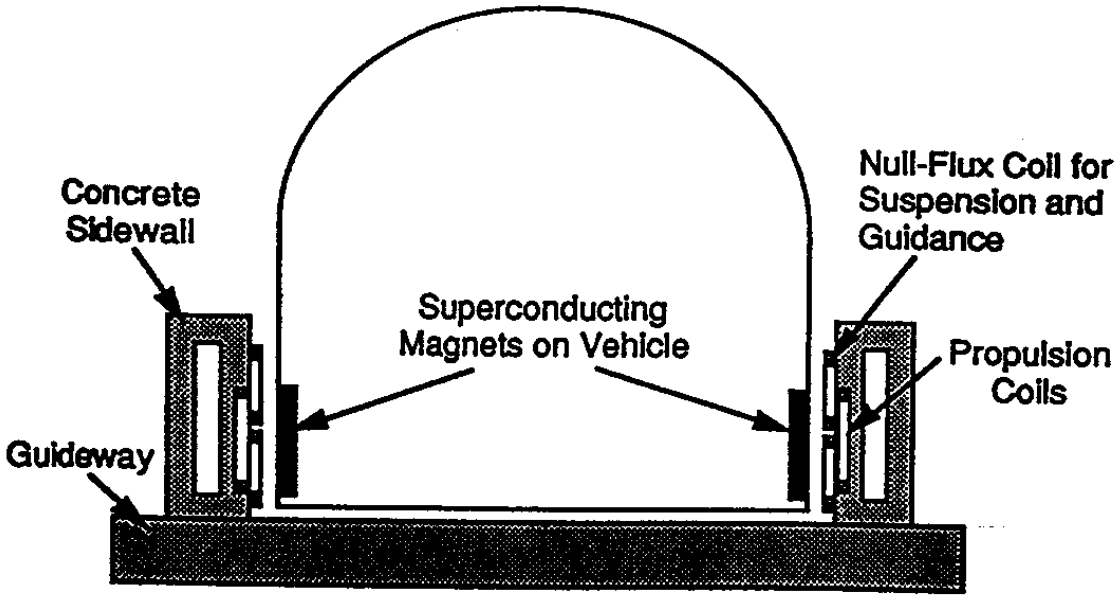

(b) Sidewall, Null-Flux Suspension System

Figure 2.2 Repulsive Force Suspension System
a) Schematic of Early Japanese Design.
b) Schematic of Recent Japanese Design

thirty years. An annotated bibliography (He, et al, 1991) covers the period up through 1991. He, et al, 1992 contains a detailed survey of foreign maglev systems. The references cited below and the bibliography at the end of this report contain additional and more recent sources of information for the interested reader .

The two basic maglev suspension system designs are illustrated schematically in Figs. 2.1 and 2.2. They utilize electro-magnetic forces in basically different ways.

2.1. Attractive-Force-Based Systems

2.1.1. Suspension System Concepts

As shown in Figure 2.1 the attractive-force system utilizes on-board magnets to suspend the vehicle from the guideway by attracting it upward toward laminated steel rails mounted on the undersides of the guideway. This type of suspension system, referred to as an electromagnetic suspension (EMS) system, is capable of levitating the vehicle while at rest. EMS systems are intrinsically unstable, which means that any displacement from the force equilibrium position results in increasing displacement in the direction of the initial displacement. Stabilization of such a suspension system requires continuous monitoring of the air gaps between the vehicle-borne electromagnet pole faces and the steel reaction rails on the guideway. The electric current through the levitation magnet windings must be controlled through a feedback loop driven by the air gap sensors. This system of feedback control can provide an effectively very stiff primary suspension system, whose stiffness is determined by the control system response time. This response time is determined in turn by the parameters of control circuit including the impedance of the magnet windings. The response time must be sufficiently short so as to avoid contacting the guideway surfaces for the shortest disturbance length at the highest operating speed This creates a tradeoff between suspension system response time and guideway smoothness. High primary suspension system stiffness and/or high-precision guideway alignment is especially important in high-speed system designs employing conventional electromagnets where the air gaps are typically only about 7 to 11 mm. This design constraint can be relaxed for low-speed systems or high-speed systems utilizing superconductor magnets that permit larger operating air gaps.

Lateral guidance for attractive-force suspension systems can be achieved in several ways:

(1) In Fig. 2.1 lateral guidance is accomplished through the use of additional on-board electromagnets that attract the vehicle toward steel rails mounted on the sides of the guideway. As with the lift magnets, the guidance magnets are energized by controlled direct current feed-back loops.

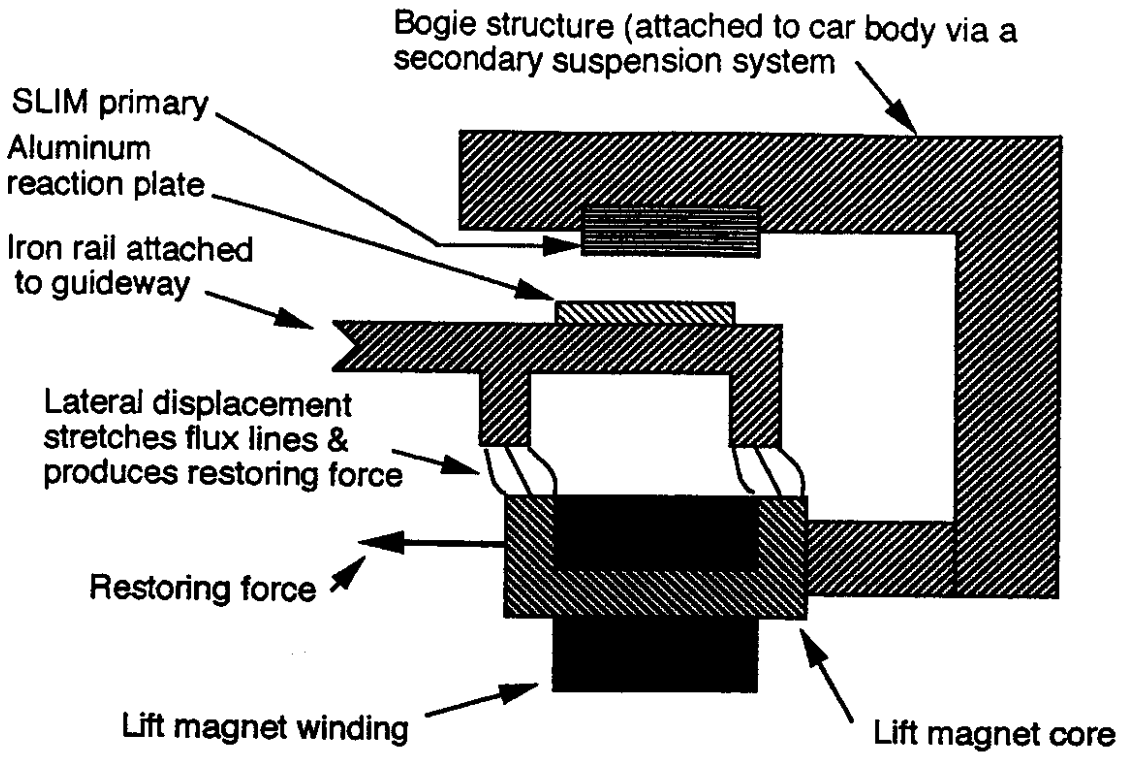

Figure 2.3 Schematic of the attractive force HSST suspension system with a single-sided LIM, and illustrating how the distortion of the flux path is accompanied by a natural restoring force. The restoring force can be further increased by increasing the lift magnet excitation.

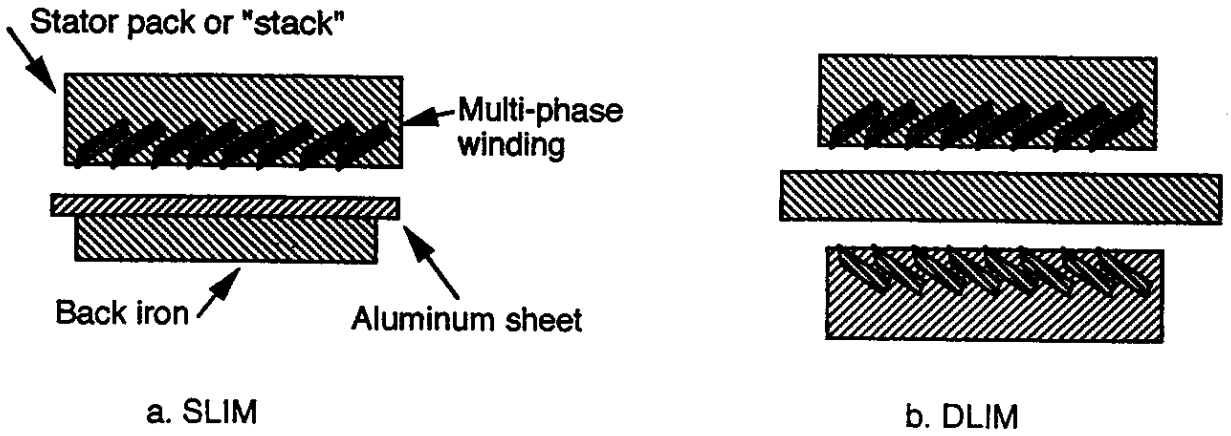

Figure 2.4 Linear induction motors

(2) An alternative guidance scheme is illustrated in Fig. 2.3 where lateral displacements can be controlled by a combination of the feedback loop that controls the excitation of the lift magnet and the natural restoring force that tends to minimize the reluctance of the magnetic flux path by aligning the magnet poles with the steel protrusions on the rail underside. This scheme is used in the Japanese low-speed HSST system design (See Fujino, 1995).

(3) A further option is to orient the lift and guideway reaction rails at an angle relative to the vertical so that the attractive force has both vertical and horizontal components that produce lift and lateral guidance forces simultaneously. Flexibility of control can be provided by driving some magnets by vertical position sensors and others by horizontal position sensors.

2.1.2. Compatible Propulsion Motor Designs

Several propulsion motor design options have been used in combination with the attractive force suspension systems.

Linear induction motors (LIM's) as shown in Fig. 2.4, consist of a stator or primary side (a series of windings embedded in slots in an iron core and energized in a manner that generates a traveling magnetic wave) and a secondary side (which consists of a reaction plate). Two configurations are in common use: the double-sided LIM or DLIM which consists of two primaries with the secondary reaction plate sandwiched in between, and the single-sided or SLIM configuration with one primary and one secondary side. In general, either the primary or secondary side may be the moving member. Short-stator motors have the magnet windings on the vehicle and the reaction plate on the guideway; Long-stator motors have the windings on the guideway and the reaction plate on the vehicle.

Two force components are present in a LIM. When the primary winding is energized, the ferromagnetic components are attracted toward one another. This is referred to as the "normal" or perpendicular (to the direction of motion) force component. In addition, when the traveling wave moves relative to the reaction plate it induces currents in it. The interaction of the applied and induced currents produces a longitudinal or thrust component and a normal component that is repulsive. The net normal force may be attractive or repulsive depending on a number of design and operating parameters.

The reaction plate may consist of a solid plate of ferromagnetic material, a thin sheet of a good conductor placed on top of the ferromagnetic material, or conductors embedded in slots in the ferromagnetic material. In the latter two cases the ferromagnetic material may be laminated. With just ferromagnetic material present, the normal force is large and attractive. With an aluminum sheet on top of the ferromagnetic material, the normal force may be attractive or repulsive or even zero.

The fractional slip between the traveling wave and the reaction plate is defined by

$$s = (v_s - v_r)/v_s ,$$

where v_s is the speed of the traveling wave and v_r is the speed of the plate. The thrust goes to zero at the synchronous speed, that is, when $v_r = v_s$. When excited by a polyphase current source (typically three-phase current), the speed of the traveling wave is given by

$$v_s = 2\ p\ f,$$

where p is the pole pitch (= one-half wave length) and f is the excitation frequency (generally, 0 to 250 Hz). Typically, as the fractional slip increases, the thrust increases to a maximum value and then decreases. The normal force is at a maximum attraction at zero slip and decreases with increasing slip and may become repulsive. Figure 2.5 illustrates the force characteristics of a SLIM that is described by Gibbon and Parker, 1986. The synchronous speed of this motor is 14 m/s.

Generally speaking, LIM's perform best when the fractional slip is relatively small (of the order of 0.1 to 0.2) (See, for example McLean, 1988). Consequently, in order to obtain reasonably good performance over the entire operating range, it is necessary to supply variable voltage variable frequency power to the LIM. For example, as the velocity is increased, the frequency is adjusted to maintain the desired slip. Detailed LIM design depends on whether the motor is intended to provide thrust or a combination of thrust and lift.

The short-stator system requires a relatively simple, low-cost guideway, and for that reason is the option of choice for transportation applications. However, this option places a heavy burden on the vehicle design. It requires that all propulsion power be either collected on board by brushes sliding along externally-energized conductors or generated on board by a primary energy source. By placing the windings, magnet cores, and power conditioning equipment (and possibly also an energy source) on board, the vehicle's weight is substantially increased. Since the vehicle's weight must be lifted by the suspension system which also requires an external power source and on-board power conditioning equipment, and since the weight of the on-board power conditioning, suspension, and motor components increase with speed, such systems tend to be limited to relatively low-speed applications. The Japanese HSST low-speed maglev system uses this option (see Fig. 2.3)

The long-stator option naturally gives rise to a much lighter and simpler vehicle design but a substantially more expensive guideway since the motor windings, magnetic cores, and power conditioning equipment for the motor are now distributed along its full length. This option eliminates the need for transferring power to the moving member and is better suited for

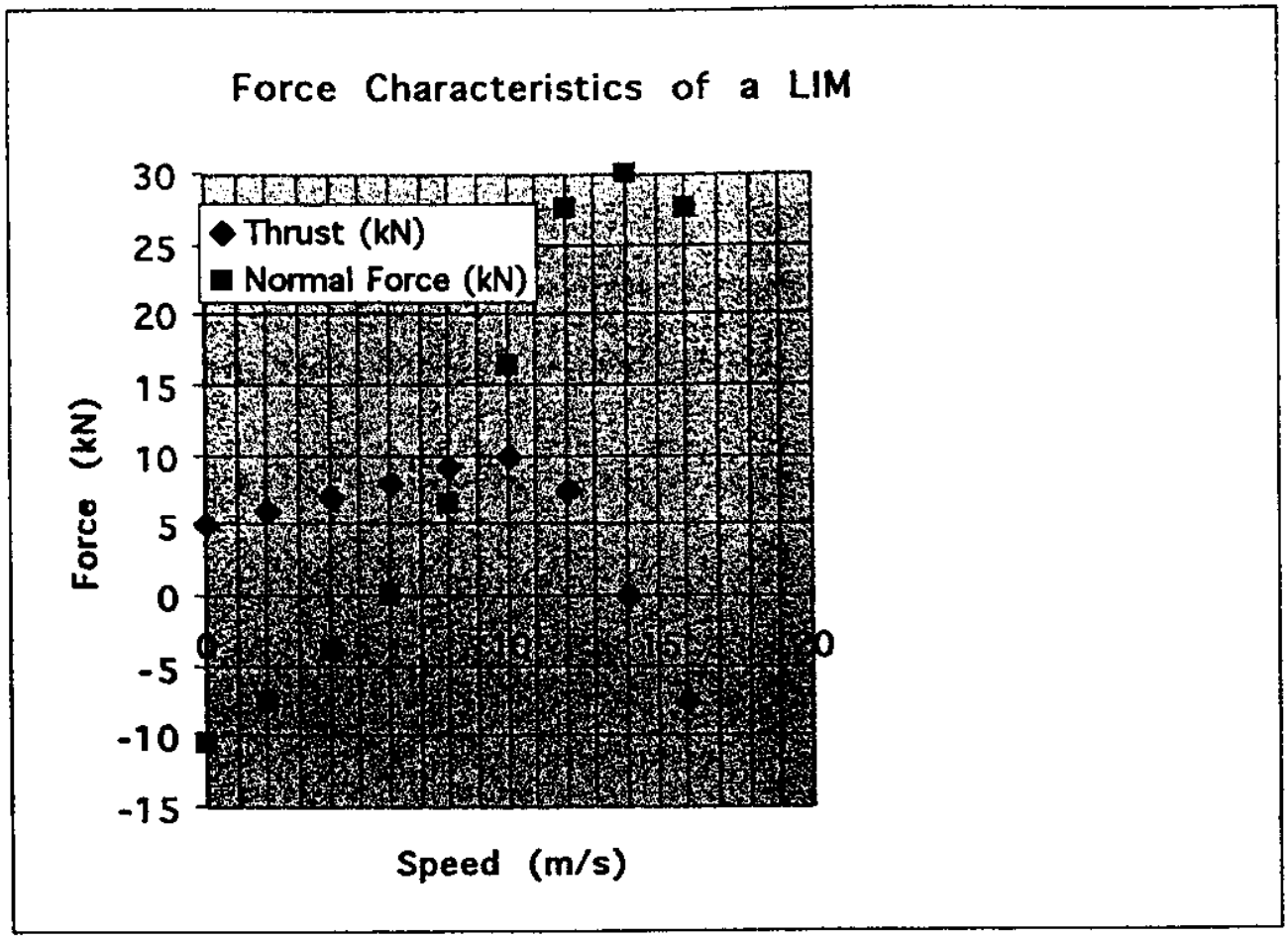

Figure 2.5 Typical force characteristics of a SLIM at fixed frequency. Data from Gibbon and Parker, 1986.

applications requiring only relatively short motors such as conveyors, projectile launchers, and perhaps wind tunnels, where cost per unit length may not be a critical issue. In addition, this option is generally characterized as having poor efficiency and a low power factor (Nasar, 1987). This characterization can be mitigated somewhat by using short winding sections that are energized only when they are in proximity to the moving part. One other important factor needs to be considered. Because the reaction rail is now mounted on the vehicle, it is subjected to ohmic heating during the entire running time of the motor. Careful attention needs to be given to temperature increases of the reaction plate which could alter its properties (conductivity, permeability, strength) or damage adjacent components. Cooling is possible, but carries a weight penalty.

Linear Synchronous Motors (LSM's) comprise the principle means of propulsion for high-speed maglev systems (EMS and EDS) transportation applications. This arises for a variety of technical and operational reasons in spite of the fact that the major components are distributed along the guideway raising the latter's capital cost. First, there is no need to transfer large amounts of power to the vehicle (a challenging problem at high speed). Second, the weight of the vehicle can be reduced by removing power conditioning equipment and major portions of the motor from the vehicle. (This can be an advantageous tradeoff when the ridership is high.) Third, at least for EDS type systems, the maximum design speed is not constrained by weight considerations. Fourth, LSM's can be highly efficient and have near-unity power factors. Finally, by locating the power conditioning equipment and control system wayside it is possible to make optimal use of regenerative braking, achieve fail safe operation of the system, and avoid the need for skilled operators on board each vehicle.

In contrast with the LIM, which has one field source and a reaction plate, the LSM consists of two separate field sources: a dc-energized magnetic field source referred to as the "field winding" and an ac-energized magnetic field source called the armature or stator winding. For the LIM, the current that is supplied to the primary winding must also produce the magnetic flux in the air gap to interact with and produce thrust. For the LSM, on the other hand, the applied current in the stator makes only a minor contribution to the air gap flux, the major portion coming from the field winding.

Generally, the stator windings are located on the guideway and the dc-excited field sources are vehicle borne (This is the long-stator configuration). The latter may consist of an array of controlled dc electromagnets, permanent magnets, or superconducting magnets. Also in contrast to the LIM, which must operate at a non-zero slip, the LSM operates at the synchronous speed (v_s as defined above). Hence a means must be provided to maintain synchronization of the traveling wave produced by the stator winding and the motion of the vehicle's magnetic poles.

Basically, two LSM topologies have been discussed in the literature that could be combined with attractive force suspension systems. One employs an active stator while the other, which is presumably less expensive, a passive stator. However, only the active stator design has been

fully implemented. For the active stator, the armature or stator windings are mounted on the guideway and are excited by wayside sources of variable voltage variable frequency (VVVF) polyphase power that create a traveling magnetic wave. Depending on system requirements, the VVVF power conditioners may be located every three km or more along the guideway. The vehicle is drawn along with the traveling wave at the synchronous speed and synchronism is maintained by monitoring the vehicle magnetic pole positions and maintaining a fixed phase relationship between those pole positions and the polarity of the traveling magnetic wave by controlling the firing times of the GTO's used in the propulsion power supply. Small adjustments in the phase relationship may be used to modulate both the thrust and lift forces and provide vehicle motion control. To facilitate system control and achieve a reasonable balance between construction and operating costs, the entire stator winding is divided into stator sections or blocks. The choice of block length is dictated by the trade off between block switching costs and motor efficiency. This tradeoff depends on thrust requirements and may differ at different positions along the guideway. Typically, the block length may range from a few hundred meters where high thrust is required to a few thousand meters in cruising sections of the guideway. The shorter the block length the lower the applied voltage must be, the more efficient the motor and the better the power factor. However, the (high-voltage, high-current, three-phase) block switches are expensive and must be maintained.

LSM's with passive stators were proposed years ago with the idea in mind of reducing the capital costs of the guideway (See, for example, Levi, 1973, and Eastham, et al, 1984). However, none of these ideas have been used in practice by those attempting to implement maglev systems.

2.1.3. Examples of Maglev Systems Using Attractive Force Suspension Systems

The German Transrapid System, Wiescholek, et al, 1995, is a fully-developed high-speed transportation system (450 to 500 km/h) that uses an EMS system. As illustrated in Fig. 2.1, it uses separate direct-current-controlled electromagnets for lift and lateral guidance. The magnets that provide lift also serve as the "field sources" for the LSM. Typically, the normal force, in this case the attractive lift force, is an order of magnitude larger than the thrust force. The Transrapid system also employs a secondary suspension system to decouple the magnet bogie (magnet support structure) motion from the passenger compartment so as to provide a softer ride. The system was certified for applications in 1991. Construction of the first commercial route (between Berlin and Hamburg) is scheduled to begin in 1998. Note that the bogie mentioned here would effectively become the cart in the wind tunnel application

The Japanese HSST system, Fujino, 1995, is a fully-developed low-speed system (130 km/h) that uses an EMS for lift combined with a passive variable-magnetic reluctance path for lateral guidance as illustrated in Fig. 2.3. SLIM's are used for propulsion. Early designs used a vehicle support structure that fitted in between the rails. A more recent design uses a structure that wraps around the outside of the guideway rails similar to the Transrapid suspension system design.

Other low-speed designs include the Magnebahn system that was operational on a demonstration basis in Berlin for several years and the Birmingham system that was used to carry people between a Birmingham Airport terminal building in England and the train station.

A high-speed system design employing superconducting magnets was proposed by the Grumman Team during the National Maglev Initiative in the early nineties (See Grumman Team Concept in NMI, 1993). Similar to the Transrapid system in concept, the Grumman design allowed a substantially greater air gap, (40 to 50 mm as opposed to 10 mm) and utilized the same magnets for lift, guidance, and propulsion. An option that was considered by the team for this design was the use of high-temperature superconducting magnets in lieu of conventional electro-magnets.

2.2. Repulsive-Force-Based Systems

The repulsive-force systems shown in Fig. 2.2 use the magnetic fields of magnets carried on board the vehicle to induce electric currents in conductors mounted on the guideway. The interaction between these eddy currents and the magnetic fields produce repulsive forces that are used to lift and guide the vehicle. This type of suspension system, referred to as an electrodynamic suspension (EDS) system, is intrinsically stable under static conditions but may be unstable under certain dynamic conditions involving the coupling of various modes of vibration and the absence of any form of enhanced damping (See Cai, et al, 1996). In general, EDS systems tend to be under damped, requiring some form of enhanced passive or active damping or motion control system. In addition, because this system requires motion of the vehicle relative to the guideway to produce the lift and guidance forces, some type of mechanical support such as a landing gear is required for speeds below the lift-off speed. Coils energized with AC can also be used to provide lift at rest and at low speeds. Generally, EDS systems are not as stiff as EMS systems, but EDS designs employing null-flux coils or flux-canceling magnet configurations can also be made quite stiff. The air gaps of EDS designs range from about 10 to 25 mm for designs using permanent magnets to 100 to 200 mm for superconductor magnet system designs.

2.2.1. Suspension System Concepts

Many types of EDS system designs have been proposed but very few have been developed to the point of reasonably large-scale testing. Most of the design options can be classified

according to the guideway conductor topology as continuous sheet and discrete coil. The vehicle-borne magnets may be either the superconducting or permanent type. An additional degree of design freedom allows the magnets to be clustered at the vehicle ends or uniformly distributed along the vehicle length. Further, the magnets may be placed in rows of alternating polarity or grouped into other multipole configurations. The functions of lift, guidance, and propulsion can be performed by the same or separate magnets. Similarly, these functions may be performed by the same or separate guideway-mounted conductors. Of course, regardless of how these functions are served by the guideway conductors, propulsion always requires connection to an external power source.

Continuous-sheet guideway conductors may have a rectangular or curved cross section and generally consist of a pair of aluminum strips spaced far enough apart to accommodate the LSM stator windings in the middle. Since a magnet moving over a single, flat, finite-width strip of conductor in the longitudinal direction is statically unstable in the lateral direction, at least two strips are required for lateral stability. The so-called split-guideway concept has been investigated by many researchers including Rhodes, et al, 1974; Hayes and Tucker, 1984; Mahtani and Rhodes, 1985; and Sakamoto, et al, 1991. Alternatively, combining vertically-oriented strips with horizontal strips improves lateral guidance considerably. It has been found that a pair of "L-shaped" continuous-sheet conductors forming a "U-shape" (See, for example, Coffey, et al, 1974, and Coffey, 1974) or alternatively an inverted "T-shape" (See, for example, Cai, et al, 1996) provides statically stable lift and guidance. Either the same magnets or separate magnets may be used to provide lift and guidance forces. Magnets interacting with a pair of curved cross-section guideway sheets produces both lift and guidance forces. (See Kolm and Thornton, 1973, Iwasa, et al, 1973, and the Magneplane Team Concept in NMI, 1993).

The continuous-sheet conductor strips provide large surface areas for the formation of induced eddy currents ranging in size up to the width of the guideway strips and lengths of the magnets. As a consequence, these eddy currents generally produce larger electromagnetic lift and drag forces (F_L and F_D) than the discrete coil guideways. In addition, the lift to drag ratios ($R_{LD} = F_L / F_D$) are generally smaller for the continuous sheet guideways. That is, the continuous sheet guideways are not as efficient at producing lift as the discrete-coil guideways although they do produce larger air gaps and more compliant rides. One problem unique to the continuous-sheet guideways is the need to accommodate the difference in the thermal expansion coefficients of concrete and aluminum (about a factor of two). This requires some form of mechanical and therefore electrical discontinuities in the sheets which produce discontinuities in F_L and F_D . Proper design can reduce these discontinuities to acceptable levels, but not completely eliminate them (See Atherton and Eastham, 1977, and Rossing, et al, 1991). Care must also be taken to avoid resonance effects associated with periodic discontinuities and the fundamental modes of vibration of the vehicles as observed by Iwahana, et al, 1980.

Discrete-coil guideways are of two general types: conventional and null-flux coils.

The conventional coil option uses rows of round or rectangular coils of good conductor wire each of which forms a closed loop of one or more turns. As in the case of the continuous strip, the force produced by a row of magnets moving over a row of coils in the longitudinal direction is statically unstable in the lateral direction. Consequently, additional coils are needed to provide a lateral guidance force. The early design of the Japanese system used coils oriented at right angles as shown in Fig. 2.2a. A design consisting of two double rows of horizontal coils was proposed by He and Rote, 1996. The values of F_L , F_D and R_{LD} obtainable with conventional coil arrays are generally between those characteristic of continuous-sheet an null-flux coil guideways. The periodicity associated with a discrete coil guideway naturally leads to a periodicity to a corresponding periodicity in the forces. However, the frequency of this periodicity is generally well above that which affect ride quality. In addition, proper design of the coils and magnets can reduce the amplitudes of the oscillatory components of the forces to quite small values relative to the time-averaged components. A hybrid conductor form referred to as a ladder design has been proposed by Thornton (See Bechtel Team Concept in NMI, 1993). An example is shown in Fig. 2.6.

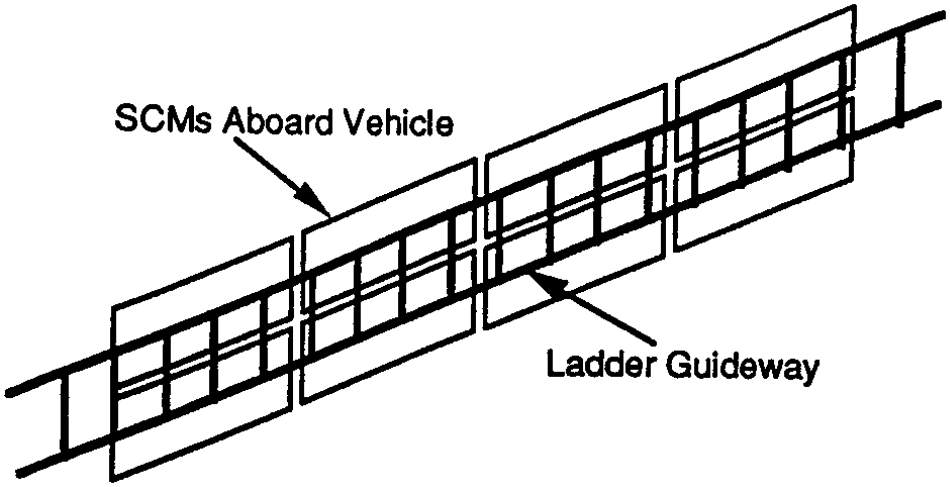

Figure 2.6 Schematic of a ladder-type guideway coil array

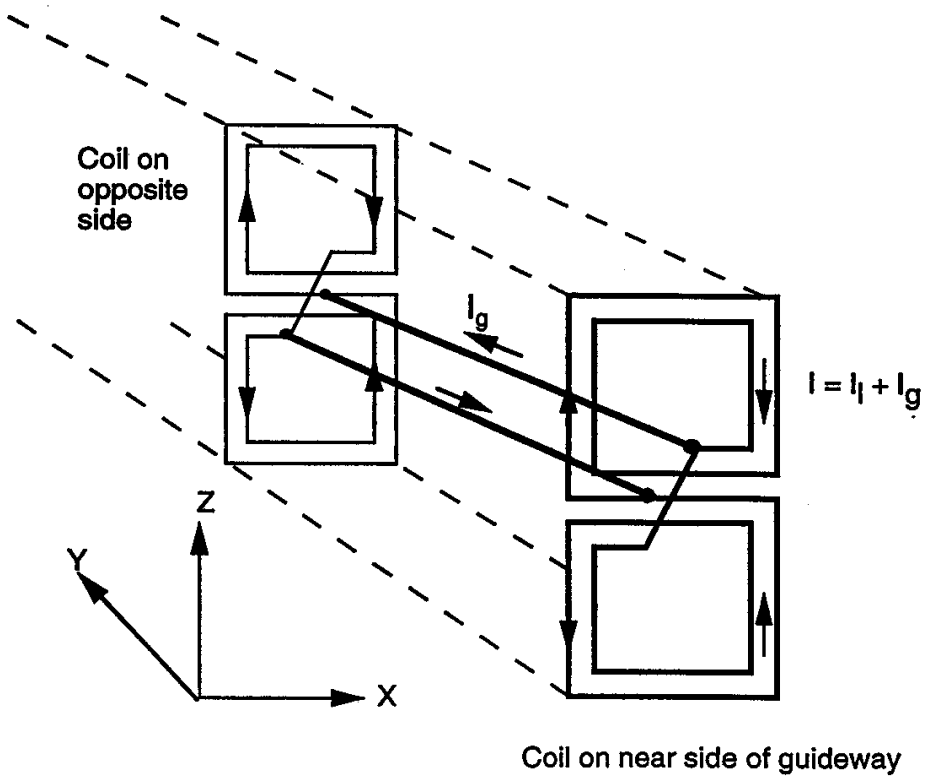

Figure 2.7 Schematic diagram of a pair of null-flux lift coils cross-connected across the guideway to produce null-flux guidance. Arrows show total current (I) flowing through the figure-8 coils and the guidance current (Ig) flowing through the cross-connecting cables.

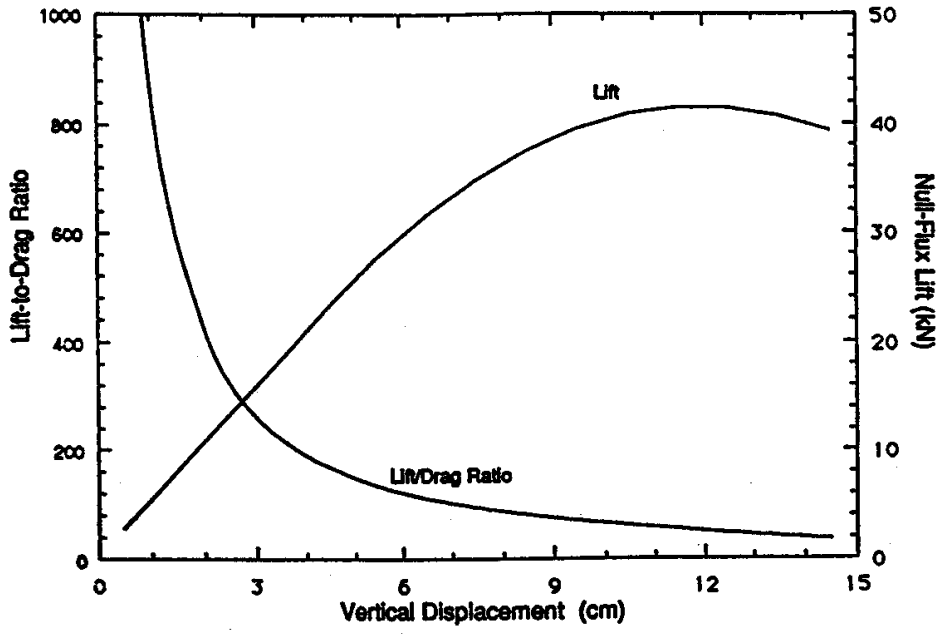

Figure 2.8 Null-flux lift and lift-to-drag force ratio per superconducting magnet (SCM), function of vertical displacement.

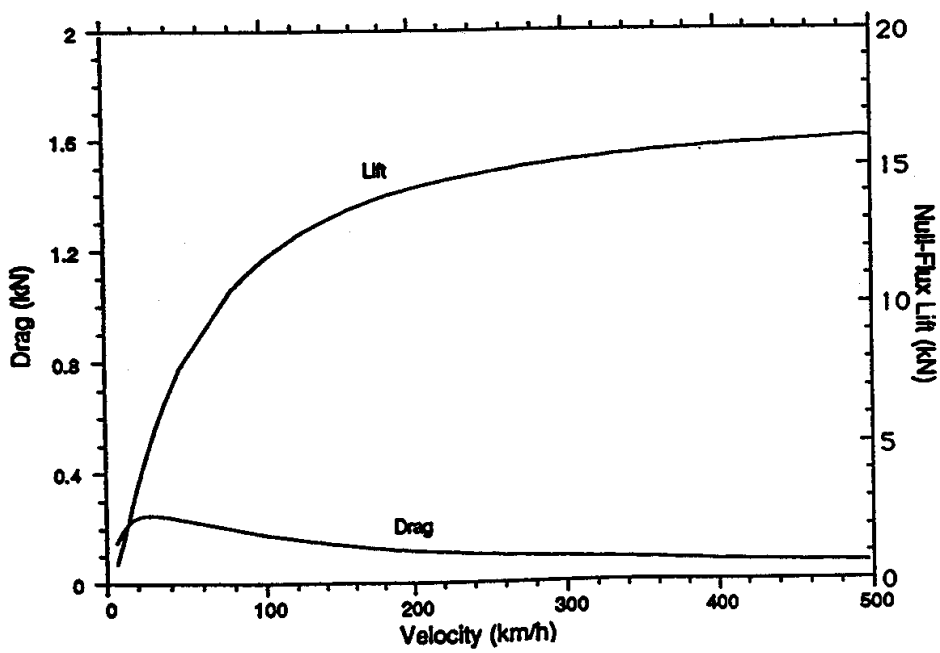

Figure 2.9 Null-flux lift and drag force as functions of vehicle velocity (air gap = 20 cm), vertical displacement = 3 cm, SCM excitation = 700 KA.T

Null-flux coil guideways utilize double-looped coils that are cross connected in the shape of a "figure 8". Null-flux coils may be placed in vertical planes to provide null-flux lift or in horizontal planes to produce null-flux guidance (See Powell and Danby, 1969 and also Atherton and Eastham, 1974). It is also possible to place null-flux coils in vertical planes on each side of the guideway and then cross connect them across the guideway to obtain null-flux guidance as well as null-flux lift from the same coils (See He, et al, 1994). This is illustrated in Fig. 2.7. Typically, null-flux lift coils are made by placing one loop coil above the other in the same vertical plane. Each loop may contain a number of turns of multi-strand wire and then the two loops are cross connected. When placed parallel to a plane containing a magnetic pole, if the upper and lower loops link the small magnetic flux pointing in the same direction, the electromotive forces induced in the two loops cancel each other and no net current flows in the closed circuit. This is the null-flux or neutral position. If the magnet is displaced upward or downward in the vertical plane so that more flux links one loop than the other, a net electromotive force is induced and a current flows in the closed circuit. By Lenz's law, the current flows in a direction to oppose the displacement of the magnet that induced the current in the first place. That is, if the magnet moves downward a vertical force acts upward on the magnet to try to restore it to the original position. If the magnet moves upward the restoring force acts downward.

Fig. 2.8 shows the lift and ratio of lift to drag forces as a function of vertical displacement from the null-flux position for a typical superconducting magnet and null-flux coil. It is evident that the lift to drag force ratio is strongly dependent on the magnet displacement from the equilibrium position. Note that theoretically, this ratio approaches very large values ($\cong$ 1000 for small displacements). The lift and drag forces as a function of velocity are shown in Fig. 2.9. The lift force increases monotonically with speed approaching an asymptotic limit while the drag force passes through a peak at low speeds and drops off exponentially as the speed continues to increase. The lift to drag ratio increases approximately linearly with speed. With proper design, the null-flux lift system can be made very stiff, requiring displacements of only one to three cm to reach equilibrium with gravity. Generally, increasing stiffness corresponds to increasing R_{LD} and greater efficiency (i.e. lower drag forces).

One variation on the null-flux design is the so-called "flux canceling" magnet/coil configuration - a proprietary design incorporated into the system design developed by the Bechtel Team during the National Maglev Initiative (See the Bechtel Team Concept in NMI, 1993). That design employs arrays of four magnets two magnets side by side with alternate polarity and two more magnets stacked on top with the opposite polarities. This means that four magnet pole faces are in the same plane and are parallel to the guideway coil plane. (But since each magnet is a dipole, the configuration is referred to as an octopole). Rather than using null-flux coils, this design uses a row of simple coils connected together to form a ladder as illustrated in Fig. 2.6. The ladder consists of a stack of vertically-oriented laminations. When the openings in the ladder are facing the magnetic poles but in the null-flux or canceled flux position, each opening

links the same amount of flux from north and south poles. Hence there is no net flux linkage and no currents are induced in the metal frame around each opening in the ladder. Only when the ladder is vertically displaced from this null-flux position does a net current flow and then it produces a restoring force to counteract the original displacement. In the Bechtel design separate coils are used for lift, guidance and propulsion.

Another variation on the null-flux scheme is the proprietary design of the AMT, Inc. (Morris and Davey, 1996). That design also uses vertically stacked magnets, in their case permanent magnets, that interact with vertically stacked coils in the guideway. Their design combines propulsion, guidance, and lift with the same set of guideway coils.

2.2.2. Compatible Propulsion Motor Designs

So far, the propulsion system of choice, especially for the superconducting EDS system has been the long-stator, air-core linear synchronous motor. The principle of operation of this motor is the same as that of the iron-core LSM described in Sec. 2.1.2 and will not be repeated here. The main differences arise primarily because of the use of superconducting magnets which allow large volumes of space to be filled with a relatively strong magnetic field. First, no ferromagnetic material is used to provide a magnetic flux path. This has the advantages that the flux density is not limited by the size of the ferromagnetic pole faces or the magnetic saturation of the material and, there is considerably more space available for the stator windings. A second difference is that the air gap can be made quite large and the effective pole face area can be made quite large without the weight penalty of a correspondingly large iron core. Fig. 2.10 illustrates a system (He, et al, 1994) in which null-flux coils are cross-connected to produce guidance as well as lift and then connected to an external 3-phase power source (for clarity, only one phase is shown connected to the null-flux coils) to produce propulsion. Such a combined system was successfully field tested by the Japanese at their Miyazaki test track, Murai, et al, 1995.

Other options for propulsion motors are briefly described below:

<u>Locally-Commutated Linear Synchronous Propulsion Systems</u>
One alternative to the use of VVVF polyphase excitation is to distribute power to switches located along the guideway via a DC bus so that each stator coil or pair thereof is energized at precisely the correct time and manner to simulate the action of a traveling magnetic wave. (In principle, the method can yield a very high efficiency propulsion system because only that

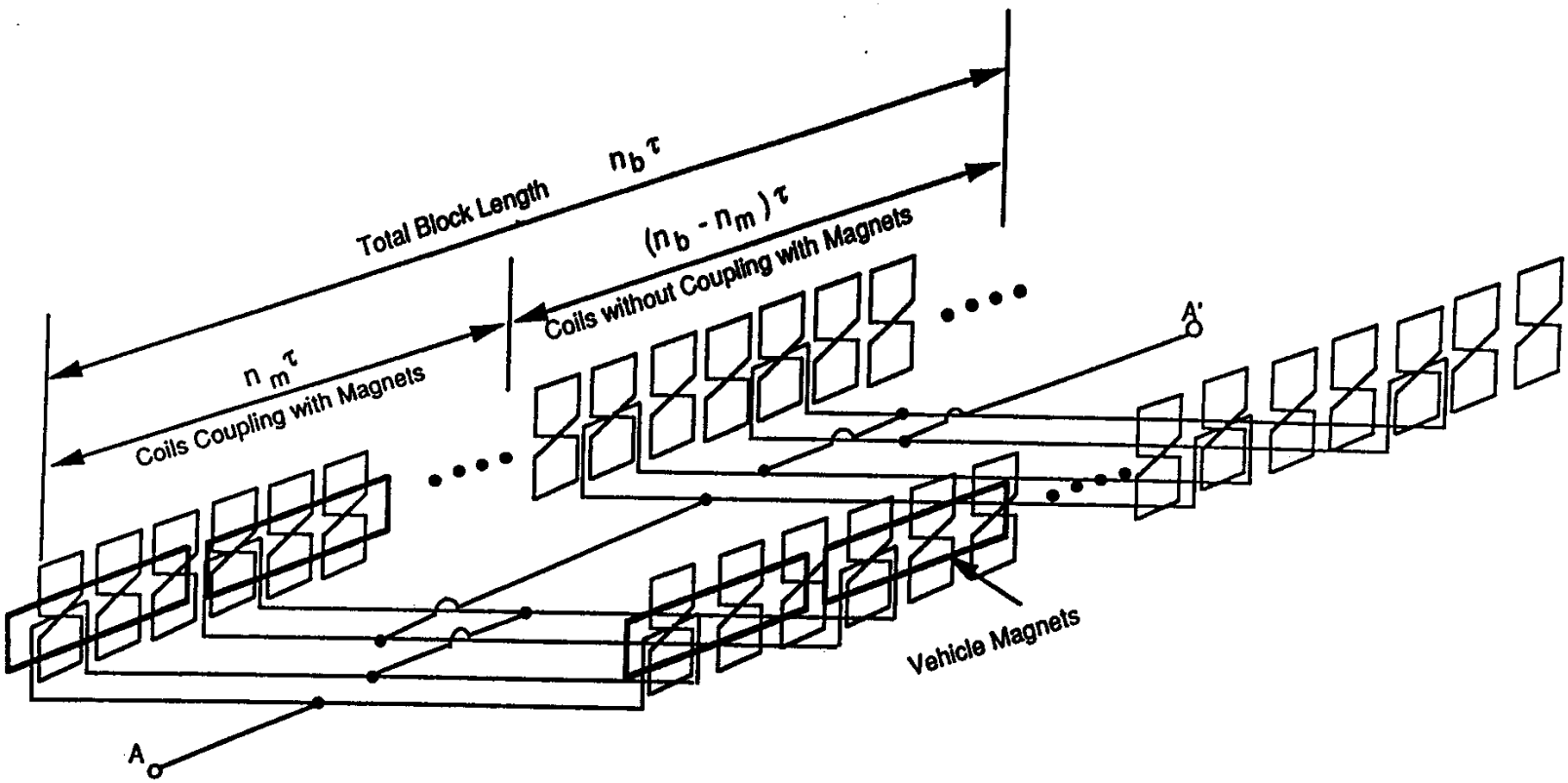

Figure 2.10 A sketch of the combined propulsion, levitation, and guidance system (from He, et al, 1994)

portion of the stator that is needed is energized and there is no problem with power factor correction. The down side is that a lot of solid-state electronic switching circuits are required per unit length of guideway. (Perhaps not such a serious drawback for a short-distance application). The option is referred to as a locally-commutated linear synchronous motor (LCLSM) and has been employed in a maglev system design by Foster Miller, Inc. (See the Foster Miller Team Concept in NMI, 1993).

DC-Commutated Motor

A third option has been proposed by AMT, Inc. (See Morris and Davey, 1996). It is a hybrid design that uses the vehicle effectively as a traveling switch that energizes the stator coils on the guideway located next to the field sources on board the vehicle as the vehicle passes by. The potential benefit of this option is the reduced capital cost of the propulsion power conditioning system which for this option does not include the cost of inverter stations distributed along the guideway as is the case for the LSM described earlier or the cost of the myriad switching circuits needed for the LCLSM mentioned above.

3. Design Configurations Suitable for New Wind Tunnel Designs

3.1. Overall Design Considerations

It is assumed in the following discussion that test runs will be performed in one direction only and that while the system must be capable of returning the model to the start end of the wind tunnel, the return trip can be performed at reduced velocities and accelerations. Running tests in both direction is possible, but poses additional engineering problems.

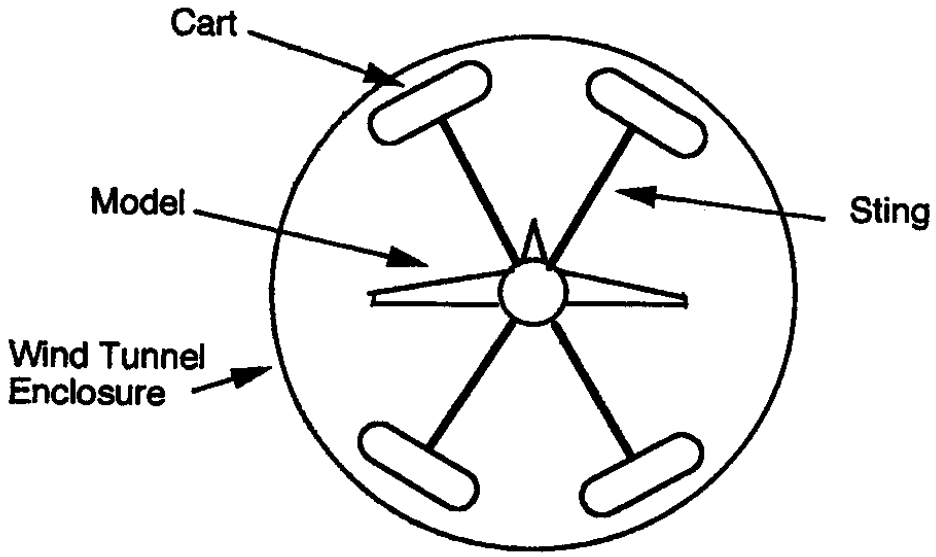

Figure 3.1a Multi-cart system

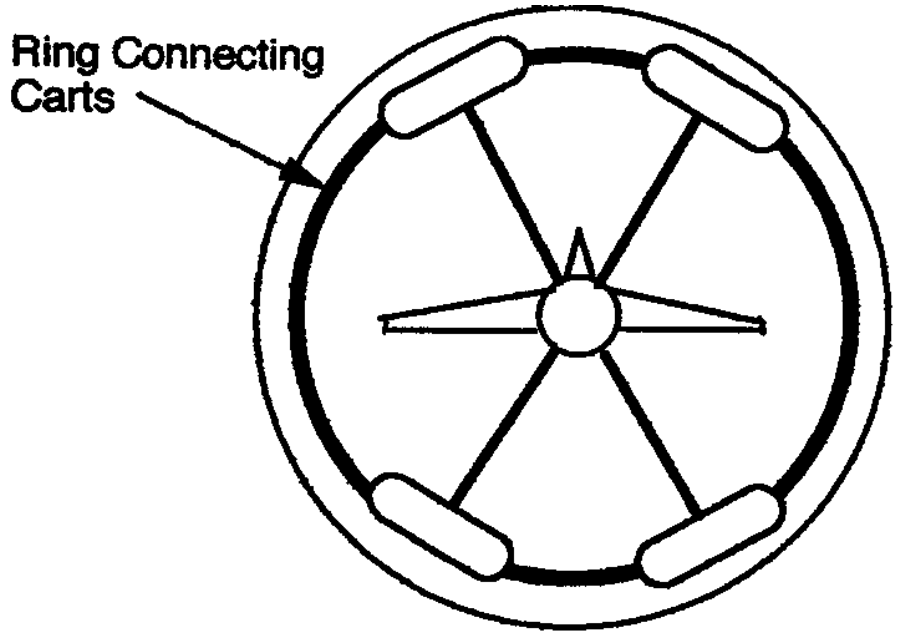

Figure 3.1b Multi-cart system with carts connected by a ring structure.

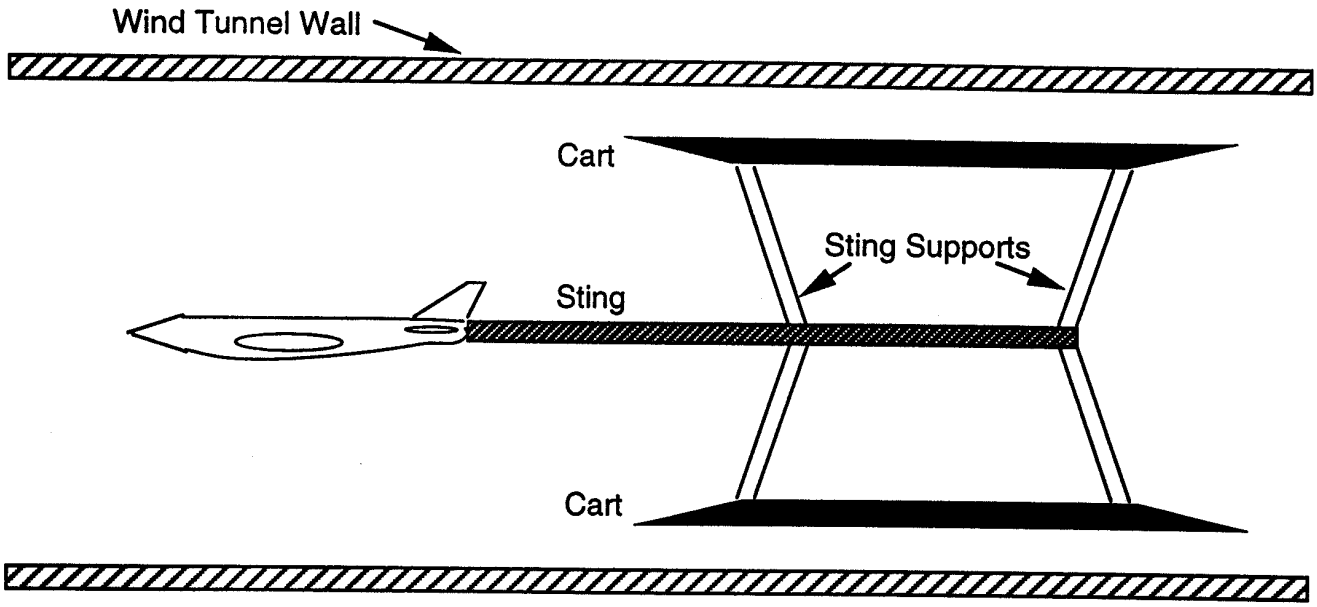

Figure 3.2a Aft Cart Option With Two Carts, One Above and One Below The Model.

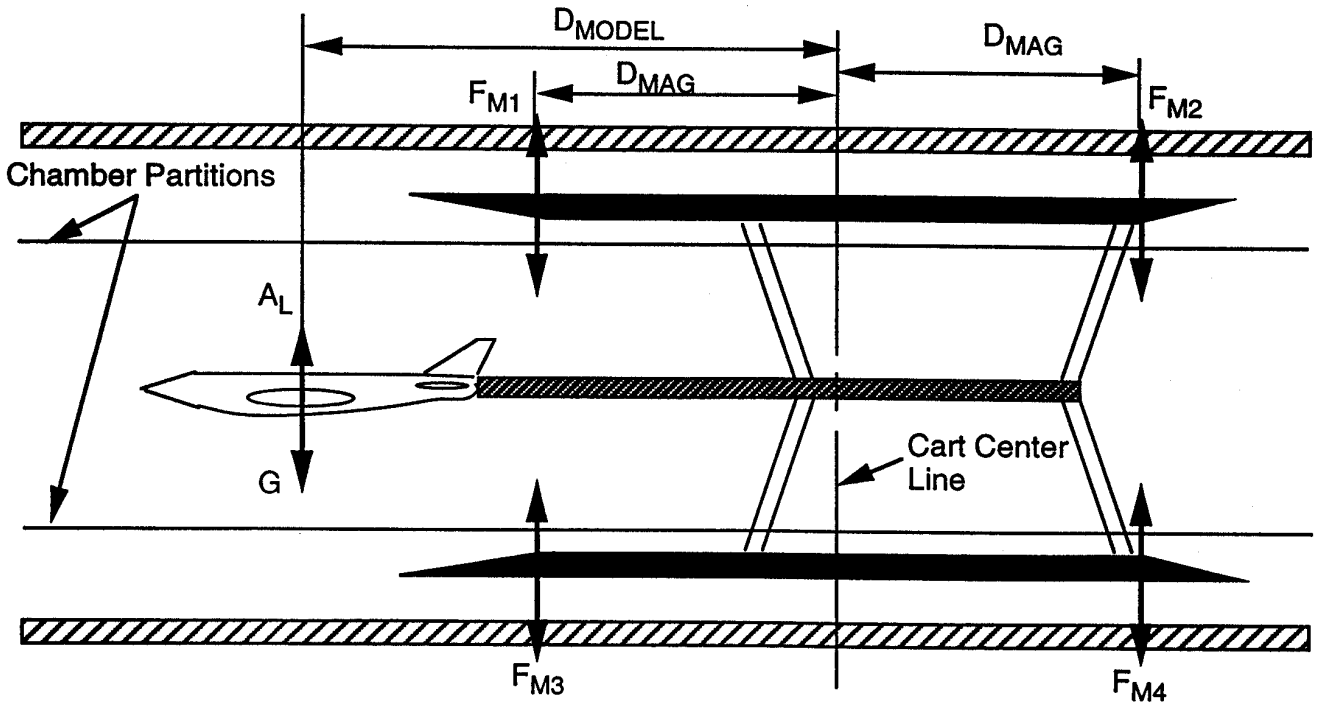

Figure 3.2b Forward Cart Option With Two Carts, One Above and One Below The Model. Shown are Chamber Partitions, and Gravity (G), Aerodynamic Lift (A_L), and Magnetic Forces (F_{M1}-F_{M4}), & Moment Arms.

3.1.1. Cart Configuration

The overall configuration of the test article support structure is envisioned as follows: The downwind end of the article is attached to a sting which is connected by struts to one or more carts. Each cart has its own suspension system and propulsion motor components, and each cart will contain at least two separate motors (one on each side of the cart). The suspension and propulsion system components on each cart will consist of two or more arrays of magnets, power supplies, power conditioning equipment, associated controls, and instrumentation. From two to four carts may be distributed around the model as illustrated in Fig. 3.1. Each cart will have its own guideway. The carts may be physically separated as shown in Fig. 3.1a, or connected pairwise or all together as indicated in Fig. 3.1b. Fig. 3.2 shows side views of the support structure. For simplicity, only two carts are shown, one above and one below the model. In order to minimize the disturbance of the wind tunnel medium by the carts and support structures, there are basically two options:

(1) The Aft Cart Option (see Fig. 3.2a) If the cart(s) are in the same chamber as the article, then the only choice is to place the test article well ahead of the carts. In this option, the carts may be rigidly connected together. This placement results in a static pitching torque that will have to be compensated for by lift force moments at all speeds, including at rest. Of course, when the model is in motion there will also be aerodynamic torques to deal with as well.

(2) The Forward Cart Option (see Fig. 3.2b) Alternatively, if the carts move in a separate chamber, i. e., the cart and test article chambers are separated by partitions with slots that are penetrated by the sting supporting struts, then the carts can be positioned further forward and/or made longer to more easily compensate static and dynamic pitching moments. However, the use of partitions precludes the possibility connecting all the carts together mechanically as shown in Fig. 3.1b. It may still be possible to connect the carts together pairwise. If the carts are not connected mechanically, then their motion and position must be tightly controlled electrically.

The choice between these two basic options presents a tradeoff between ease of compensation of static and dynamic pitching moments, [Option (2)], and potential benefits of rigidly connecting all the carts together, [Option (1)]. This tradeoff will be examined for each of the suspension/propulsion system candidates.

3.1.2. Control of Pitching and Other Moments

The various forces and moment arms that contribute to the static and dynamic pitching moments are shown schematically in Fig. 3.2b. For the configuration illustrated, the gravity force will always result in a counterclockwise pitching moment. The aerodynamic lift force is shown acting upward, but, in general, its direction will be dictated by the model's orientation. Compensating forces produced by a subset of the cart magnets are shown acting either up or

down at the cart ends. These are referred to as the control forces. For the case illustrated, the balance of pitching moments is expressed in Eqn. (1).

$$(F_{M1} + F_{M3} - F_{M2} - F_{M4}) \times D_{MAG} = (G - A_L) \times D_{MODEL} \quad (1)$$

In addition, balancing the vertical forces requires that

$$F_{M1} + F_{M2} + F_{M3} + F_{M4} + F_L = G - A_L + W_C, \quad (2)$$

where F_L is the main lift force and W_C is the weight of the carts, sting and struts. For simplicity, it will be assumed that $F_L = G - A_L + W_C$, and $D_{MODEL} / D_{MAG} = R$. With these assumptions,

$$F_{M1} + F_{M3} = (G - A_L) \times R / 2 , \quad (3)$$

and $$F_{M2} + F_{M4} = - (G - A_L) \times R / 2 \quad (4)$$

Comparing these force pairs with the total lift force,

$$(F_{M1} + F_{M3}) / F_L = (G - A_L) \times R / (2 \times (G + W_C - A_L)). \quad (5)$$

The forward and aft cart options may now be examined:
<u>For the aft cart option</u>, R = 3 and $W_C = 2G$, and Eqn (5) gives

$$(F_{M1} + F_{M3}) / F_L = 1.5 \times (G - A_L) / (3G - A_L). \quad (6a)$$

$$= 0.5, \text{ when } A_L = 0 \text{ (system at rest)} \quad (6b)$$

$$= 0, \text{ when } A_L = G. \quad (6c)$$

<u>For the forward cart option</u>, R ranges from 1 to 1.5, and Eqn. (5) gives

$$(F_{M1} + F_{M3}) / F_L = (0.5 \text{ to } 0.75) \times (G - A_L) / (3G - A_L). \quad (7a)$$

$$= 0.167 \text{ to } 0.25, \text{ when } A_L = 0 \text{ (system at rest)} \quad (7b)$$

$$= 0, \text{ when } A_L = G. \quad (7c)$$

Comparing Eqns. (6) and (7), it is seen that there is a significant advantage in using the forward cart option with respect to the magnitude of the control forces. Of course, if mechanical supports are used for the at-rest and low-speed cases, then this advantage is eliminated. On the other hand, the forward cart option would be even more advantageous if the A_L term were of the opposite sign.

Similar expressions can be written down for the other moments (rolling and yawing). The main requirement of importance here is that a sufficient portion of the magnetic forces must be adjustable relative to the required lift, guidance, and propulsion forces to compensate for all moments that will arise under normal facility operations.

3.1.3. Duty Cycle

A typical duty cycle of the wind tunnel will consist of an acceleration period, a constant velocity test period and a deceleration period. This will be followed by operating the system in reverse (but at lower accelerations) to restore it to the starting position. During the acceleration period, the available thrust (T) must overcome inertia and the velocity-dependent aerodynamic and electromagnetic drag forces. Consequently the equation of motion takes on the form

$$M \times A = T - F_{aero,\ model}(v) - F_{aero,cart}(v) - F_{em}(v)\ , \qquad (2)$$

where, for convenience, the aerodynamic drag forces are assumed to be proportional to v^2 and the dependence of the electromagnetic (EM) drag force on the velocity depends on the type of suspension and propulsion motors used. For attractive force suspension systems, the EM drag force is quite small and relatively independent of velocity. For repulsive force systems the EM drag force is larger and is velocity-dependent, with a peak value at low velocity (generally of the order of several m/s), followed by a fall off with increasing speed (see Fig. 2.9). The thrust (T) may or may not depend on the velocity depending on the details of the motor design or any power limitations of the system. In general, however, the acceleration will not be a constant.

During the deceleration period, all the forces in Eqn. (8) will act to slow the cart(s) and the thrust is replaced by an electrodynamic brake force. The regenerated energy from the electrodynamic brake can be dissipated in a resistor bank or stored for the next acceleration period. In either case, the deceleration would be much greater than the acceleration, and the only limitation on the braking force becomes the thermal capacity of the stator windings and connecting cables and method of handling the regenerated power. Enhanced aerodynamic braking may also be employed. Thermal limits permitting, the deceleration could be made several times the acceleration. Consequently, the entire length of the test facility will be dominated by the length of the acceleration period, which can only be determined by integrating the equation of motion with all velocity dependencies included.

The time between test runs, i.e. the turn-around time, will be determined by a number of factors including thermal management considerations, the time required to return the model to the start end of the tunnel, and the time to recharge the power system if cyclic energy storage devices are used.

3.2. Candidate System Designs

In the above review of suspension and propulsion system designs for transportation applications, desired propulsion forces tended to be 5 to 10 times less than the lift forces. For the wind tunnel application, propulsion force must be comparable to or larger than the lift force. This represents the single most important design challenge.

The three main candidates for the wind tunnel application are :

(1) The LIM, used with a separate suspension system, or in a hybrid system.
(2) The iron-core LSM used in conjunction with an attractive force suspension system. This combination is referred to as an EMS system.
(3) The air-core LSM used with a repulsive force suspension systememploying null-flux guideway coils and superconducting magnets on board the carts. This combination is referred to as an EDS system.

Each of these main candidates can be further broken down according to specific parameters, no. of carts, no. of motors/cart, and forward vs aft cart configuration. In addition, both single and double-sided motor configurations are considered.

A system computer model is being developed to investigate these three main candidates and their specific design parameter values quantitatively. Initially, the emphasis has been on the feasibility of satisfying the propulsion requirements - the most challenging problem. Later, if follow-on work is done, attention will shift to the lift and guidance forces, self-consistency of the loads (i.e., the masses of the various components), control magnet arrangements, and thermal issues. In this model, a variety of system design parameters can be input, the equation of motion integrated and the time and distance required to reach a desired test speed determined. The total system mass is fixed and that mass is apportioned to magnets, carts (including magnets, sting and struts), and payload (i.e. test article) according to force requirements. Consequently, system designs requiring heavy magnets have less payload capacity. Appendix A lists the input and output parameters for a typical calculation at the present stage of development.

3.3. Numerical Results of Preliminary Design Modeling Study

The results of calculations with the computer model are summarized in Table 3.1 for the three main candidate systems:

Table 3.1 Summary of Numerical Results

INPUTS						**NOTES**											
Total Wt. (Tons) =				40		Cu means copper windings with design current density of 8 amperes/mm^2											
Final Speed (ft/s) =				350		Al means aluminum windings with design current density of 4 amperes/mm^2											
Deceleration (g's) =				3		Magnet and cart masses calculated only for FE LSM's											
Test Interval at max. speed (s) =				2		SLIM = Single-sided linear induction motor											
Test section length (m) =				213		DLIM = Double-sided LIM											
Deceleration length from Vmax =				193		LSM = Linear synchronous motor											
						DSLSM = Double-sided LSM											
PARAMETERS	Motor Length (m)	Motor width (m)	No. of motors	Stator pole pitch (m)	Stator mmf (kAt)	Stator Cond. CS (in^2)	Stator Pole facelength (m)	Air gap flux den. (T)	Freq (Hz)	Thrust (kN)	Normal force (kN)	Total Magnet mass (kg)	Total Cart(s) mass (kg)	Max. Test art. mass (kg)	Accel time (s)	Accel length (m)	Total length (m)
SLIM 1-Cu	38.7	0.16	2	0.24	10	1.938	0.0357		222	167	100				27.5	1598	2004
SLIM 2-Cu	10	0.32	4	0.24	10	1.938	0.0357		222	172	100				26.5	1536	1942
SLIM 3-Cu	10	0.32	4	0.24	10	1.938	0.0357		222	180	200				25	1439	1845
SLIM 4-Cu	10	0.5	4	0.24	10	1.938	0.0357		222	273	200				15.8	890	1296
SLIM 5-Cu	10	0.5	8	0.24	10	1.938	0.0357		222	528	200				7.75	428	834
DLIM 1-Cu	10	0.05	16	0.24	10	1.938	0.0357		222	1039	200				3.9	215	621
Fe LSM 1-Al	38.7	0.19	2	0.258	1.2	0.465	0.0504	0.829	207	110	1842	24642	36965	-684	47	2881	3287
Fe LSM 2-Al	10	0.32	4	0.24	2	0.775	0.0433	0.75	222	159	1255	16795	25192	11089	29	1691	2097
Fe LSM 3-Al	10	0.32	4	0.24	4	1.55	0.0302	0.55	222	234	556	7440	11160	25121	18.5	1045	1451
Fe LSM 4-Al	10	0.32	4	0.24	6	2.325	0.0202	0.45	222	267	460	4163	6244	30037	14.8	825	1231
Fe LSM 5-Al	10	0.5	4	0.258	6	2.325	0.0262	0.45	207	417	719	9623	14434	21847	10	559	965
Fe LSM 6-Cu	10	0.5	4	0.258	10	1.938	0.0309	0.45	207	695	695	9303	13954	22327	5.8	312	718
Fe LSM 7-Cu	10	0.5	4	0.258	6	1.938	0.0309	0.35	207	325	429	5736	8604	27677	12.9	717	1123
Fe LSM 8-Cu	10	0.5	8	0.258	6	1.938	0.0309	0.35	207	649	858	11472	17208	19073	6.2	338	744
Fe DSLSM 9-Cu	10	0.5	16	0.258	6	1.938	0.0309	0.35	207	1298	1715	14340	21510	14771	3.1	170	576
Air LSM 1	11.8	0.5	2	2.1	10.8	3.52		0.526	25.4	67.9	0.7				154	12350	12756
Air LSM 2	11.8	0.5	2	1.35	10.8	3.52		0.526	39.5	90.6	0.7				64	4140	4546
Air LSM 3	10	0.5	4	2.1	21.6	7.03		0.526	25.4	181	3				25	1452	1858
Air LSM 4	10	0.5	4	1	21.6	7.03		0.526	53.3	453	3				9	495	901
Air LSM 5*	10	0.5	4	1	21.6	7.03		0.789	53.3	679	4.2				6	332	738
Air DSLSM 1	10	0.5	16	1	10.8	3.52		0.526	53.3	906	262				4.5	250	656

*Magnetomotive force (mmf) = 1050 Kilo ampere turns (KAt), all other Air LSM's use 700 KAt.

Single-sided linear induction motors (SLIM's),
Iron-core linear synchronous motors (Fe LSM's), and
Air-core linear synchronous motors (Air LSM).

The number following the motor type refers to the set of input parameters used (columns 2-8). Double-sided versions of the propulsion motors are also listed (DLIM, Fe DSLSM, & Air DSLSM). The double-sided motors allow twice as many motors to be used for a given number of carts. Qualitatively, the total cart mass will increase somewhat using double-sided motors but not nearly as much as adding more carts and struts. It is important to note that, to the level of approximation used in the model, the forces are directly proportional to many of the input parameters including the motor length (M_l) and width (M_w), and number of motors (N_m). That is, approximately the same forces can be attained if the product $M_l \times M_w \times N_m$ remains constant. Also, going from a single-sided to a double-sided motor is assumed to double the forces. Using copper in place of aluminum allows more current to flow through a given cross-sectional area with essentially the same ohmic losses and heating. Other benefits derive from using copper, but they are not treated in the model.

It can be seen from this summary that ranges of parameter sets exist that allow all three motor types to attain sufficiently large accelerations to yield total tunnel lengths in the range of 600 to 1000 m (1970 to 2950 ft). The minimum requirements for all three main motor types are:

Motor length >= 10 m
Motor width >= 0.5 m
No. of motors >= 4 to 8, depending on motor type and design parameters
Stator mmf >= 6,000 to 22,000 ampere.turns, depending on motor type and other parameter values

4. Comparison of Design Options

4.1. Basis of Comparison

The basis for comparing the suitability of various design options for wind tunnel applications derives from technical feasibility considerations. Economic factors were regarded as of secondary importance at this stage. Given that there is no proven system design that will meet the major requirements of such an application, it should be clearly recognized that this comparison rests on a significant amount of theory, and extrapolation of existing knowledge and experience and may be subject to substantial reconsideration after more detailed investigation and experimentation.

The following measures are used to compare the technical feasibility of the various candidate design options for the wind tunnel application:

(1) Ability to meet specified kinematics requirements within a distance of 600 to 900 m. That is, the ability to accelerate to a maximum test speed of 350 ft/s (106.7 m/s), maintain that speed for at least 2s, and decelerate to rest in under 1 Km.
(2) Ability to meet the specified force and moment requirements.(see Sec. 1.2)
(3) Ability to meet motion control or stability requirements.(See Sec. 1.2)
(4) Ability to operate in planned environments. Temperature range = -250 to =100 F; Medium pressure = 1 to 5 atmospheres.
(5) Amount of energy that must be carried on board and/or to transferred to carts
(6) Freedom to use forward or aft cart option.
(7) Technical areas with significant uncertainty (potential "show stoppers")
(8) Extent to which similar concepts have been developed and tested
(9) Need for additional analysis and/or hardware development and testing

4.2. Measure by Measure Comparison

Each of these measures are now applied to the following three candidate designs:

(1) Ability to meet specified kinematics requirements within a distance range of 600 to 900 m. As indicated above, all three main design candidates meet this requirement under certain conditions.

Iron-core SLIM: Requires at least 8 motors that could be mounted on 4 carts or 4 motors mounted on 2 carts. To avoid the necessity of having to transfer the propulsion power on board the carts, the motor topology of choice would be to energize the guideway-mounted stator coils and place reaction plates on the carts. Iron-backed aluminum plates could be used for the SLIM option and aluminum plates for the DLIM option. The SLIM option requires careful control of the slip to avoid excessively large normal forces and to produce large thrust. Both the SLIM and DLIM options will cause substantial heat to be generated in the reaction plates on the carts. This amount of heat may result in thermal problems unless it is properly managed. This is an issue requiring further investigation. In addition, a separate suspension system will be required to provide lift and guidance forces and to compensate for imposed torques. The combining of such a system with the SLIM or DLIM requires further investigation. A possible design concept is illustrated in Fig. 4.1.

Iron-core LSM: Requires at least 4 motors and at least 6,000 At of stator excitation (about 5 times that used on the German Transrapid system). Since the Transrapid system is designed to produce 10 times as much lift as thrust, it appears feasible to alter their design substantially to achieve almost the inverse of that ratio. That is, the thrust may be increased at the expense of the unneeded lift by increasing the stator excitation and reducing the pole face area and field excitation. By controlling the control angle and applied voltage, it should

be possible to achieve both the desired thrust and lift forces. A DSLSM is possible but little has been said about such a motor topology in the literature. A possible design concept is illustrated in Fig. 4.2.

Air-core LSM: Requires at least 4 motors and a stator excitation of about twice (for the same field excitation) what has been used by the Japanese during experiments on the Miyazaki Test Track (Murai et al, 1995). There are no spatial constraints as with the Transrapid system that would prevent increasing either the stator current or the field excitation. In addition, assuming that null-flux lift coils are used, there is ample freedom to meet the separate lift and propulsion requirements. The use of double-sided LSM's would effectively increase the thrust without a large weight penalty or provide the same thrust with reduced weight. Existing air-core LSM technology is probably the closest to meeting the wind tunnel requirements without much uncertainty or extrapolation beyond existing technology. If the choice were to increase the mmf of the field magnets substantially beyond the current value of 700 KAt used by the Japanese, then some developmental hardware design work and experimentation may be called for.

(2) Ability to meet the specified force and moment requirements.

Iron-core SLIM: This motor option by itself can meet the propulsion but not the lift and guidance force requirements. This judgment is supported by the general tendency found in practice and in the literature not to attempt to use LIM's for lift and guidance functions. (See, for example Eastham, et al, 1984 and 1987, and note the use of separate suspension system for the HSST system). The normal force produced by a LIM tends to be a very sensitive function of the slip parameter. This suggests that control of the normal force as a means of providing the required lift force and control torques would be quite difficult. Consequently a LIM would most likely have to be combined with either an EMS or EDS system that would provide the necessary lift and guidance forces and control torques. Since the SLIM operates with a small air gap, it would be most compatible with an iron-core LSM. See below for further comments regarding LSM's. Addition of an iron-core LSM would incur a substantial weight penalty since iron-core magnets and power supplies would need to be carried on board the carts. An illustration of a suitable system concept is given in Fig. 4.1

Iron-core LSM: This option can meet all force requirements. However, as normally configured, the lift force is much larger than the thrust force, and it can not compensate for aerodynamic lift forces greater than the gravity force but oppositely directed to it. Nor can it compensate for large pitching moments (see Sec. 3.1.2.). Hence, the conventional design

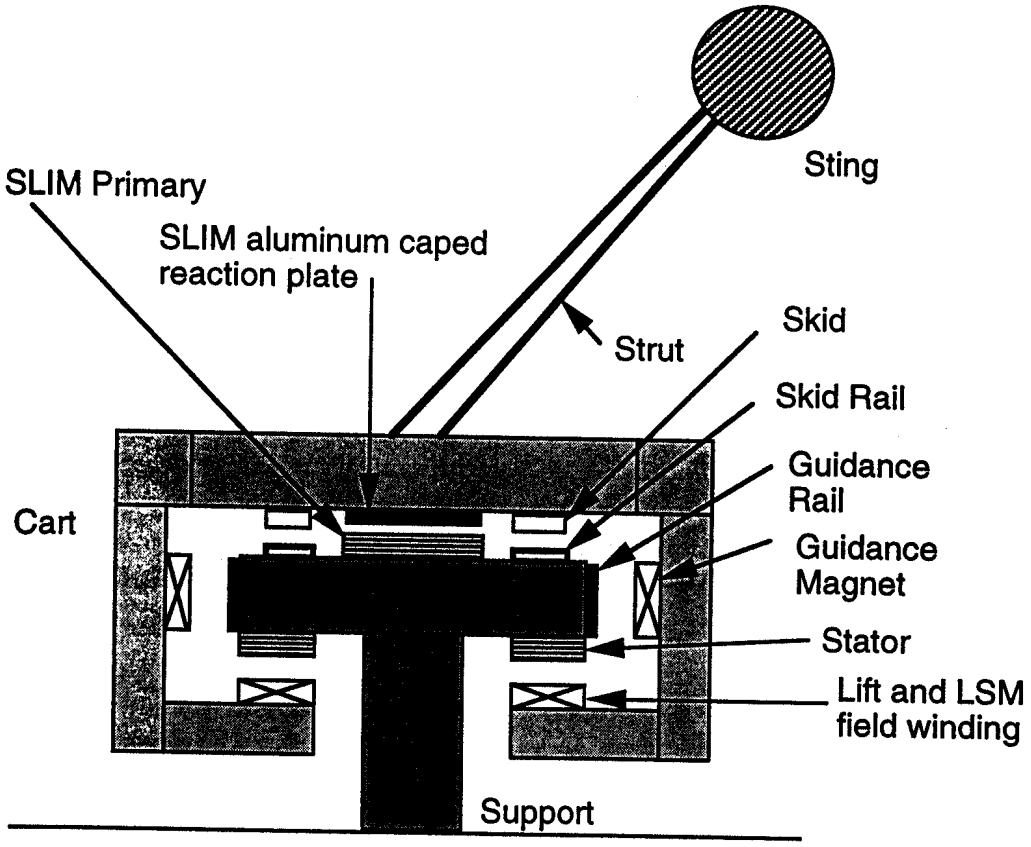

Figure 4.1 Detail of a possible Hybrid system using a SLIM to augment the thrust of an EMS system with an iron-core LSM and conventional magnet windings. Only left side is shown. Unit may be inverted to suspend model from top.

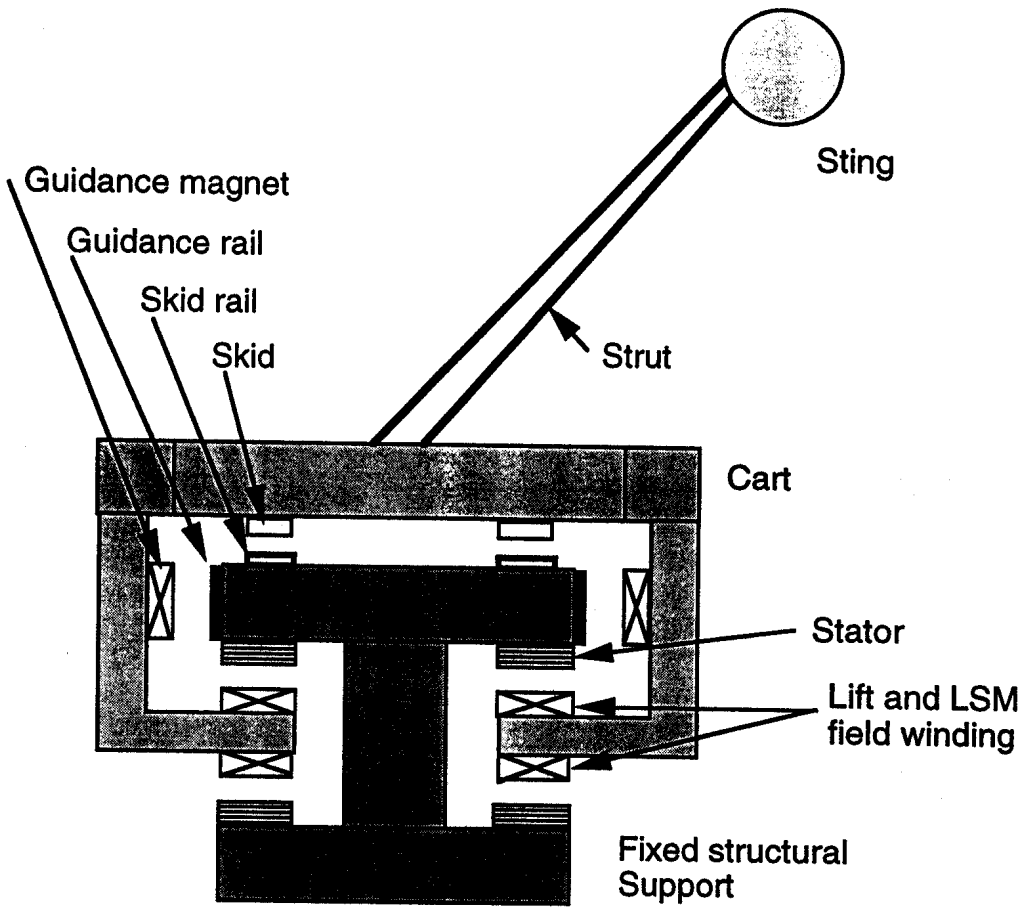

Figure 4.2 Detail of a possible EMS cart design using a double-sided iron-core LSM and conventional magnet windings. This design produces vertical forces up and down. Only left side is shown. Unit may be inverted to suspend model from above.

must be substantially modified. First, to enhance the thrust relative to the lift force, the stator current must be significantly increased and the field excitation must be reduced. Second, some of the field magnets must be inverted to produce additional thrust and at the same time normal forces that are oppositely directed to the main lift forces. This will be equivalent to double-sided LSM's and will also permit the control of forces and torques not possible with the conventional design. A schematic diagram illustrating such a system concept is given in Fig. 4.2. Alternatively, SLIM's whose slip is adjusted to produce repulsion as well as thrust could also be used to accomplish the same purposes. Such SLIM's would require the use of thick aluminum reaction plates so as to ensure repulsive normal force components. Permanent magnets reacting against aluminum reaction plates could also be used to provide repulsive forces for small air gaps.

Air-core LSM: The combination of an air-core LSM and a null-flux lift and guidance system can meet the force requirements relatively easily. The null-flux system has the added advantage that it can apply forces equally in two opposite directions allowing for cases where the aerodynamic lift force may be greater than the gravity force. The nominal sensitivity of the vertical displacement (relative to the null-flux position) to the lift force is 3 cm per 100% lift force or 0.3 mm per 1% change in lift force. However, to compensate for large pitching moments, requiring a change in direction of the vertical force at one end of the cart, that end would have to undergo a vertical displacement of more than 3 cm in order for the vertical force direction to change. This corresponds to a change in attitude of a 10-m cart of
> +/- 0.17 degrees; too large to meet the stability requirement of +/- 0.075 degrees. This problem may be solved by vertically displacing one or two control magnets relative to the null-flux position so as to create a downward bias in the vertical force about which control adjustments can be made as needed. The magnitude of the vertical force bias would be adjusted as needed by adjusting the excitation of the displaced control magnet(s).

Figure 4.3 illustrates an EDS system design suitable for a wind tunnel application. The launch platform is used to provide a smooth transition from mechanical support on wheels to magnetic support as the lift-off speed is approached. Such a platform also reduces the EM drag peak that occurs at low speed. Alternatively, if adjustable height landing gears are used, then the platforms can be eliminated. Figure 4.4 shows a variation of the conventional EDS system employing two double-sided LSM's. This variation, called the douyble-keel design, was proposed by He, et al, 1996. It should be mentioned that the use of double-sided LSM's will not only double the thrust for a given set of magnets, but will decouple the lateral and rolling modes. This increases the dynamic stability of the system. Figure 4.5 shows an inverted EDS design that can be used for overhead or side mounting. Figure 4.6 shows a single cart in an overhead configuration with four double-sided LSM's. Two such carts one above and one below the model, would contain the

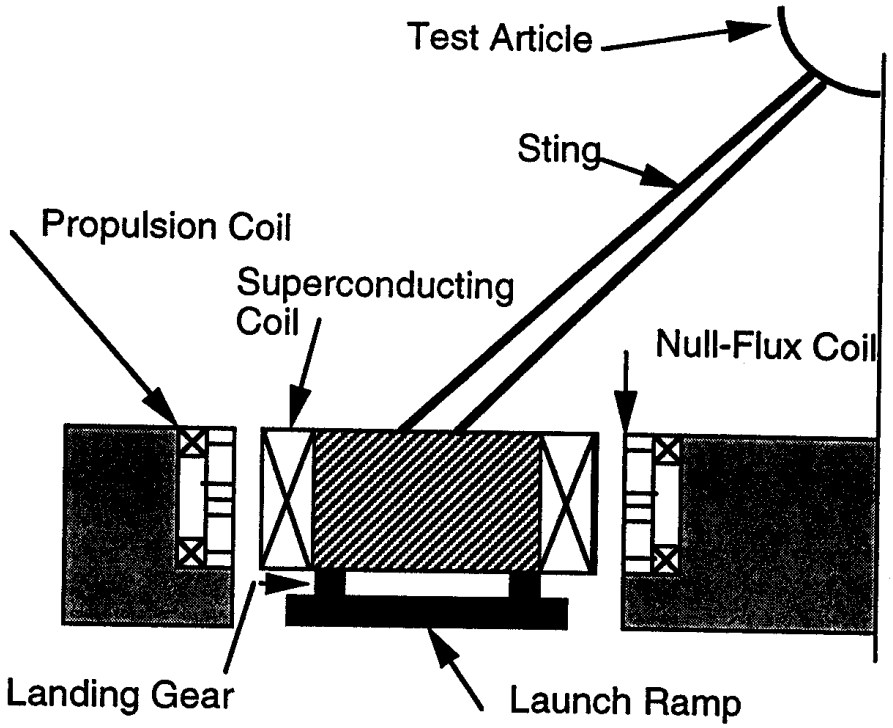

Figure 4.3 Detail of cart using EDS suspension system and air-core LSM. Only left side of two-cart system shown.

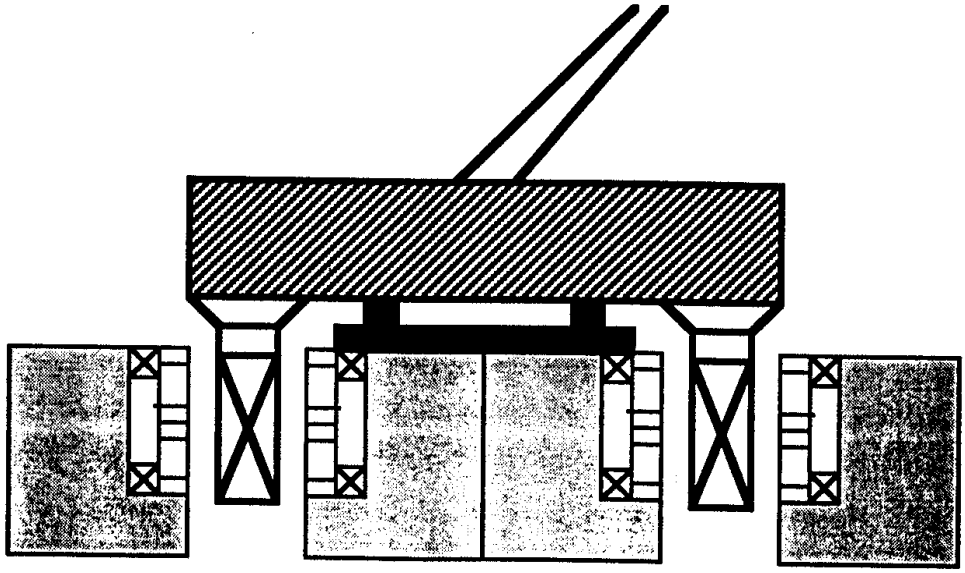

Figure 4.4 Detail of cart using EDS with a Double Keel design that uses double-sided LSM's. Only left side is shown. Same symbols as used in Figure 3.4.

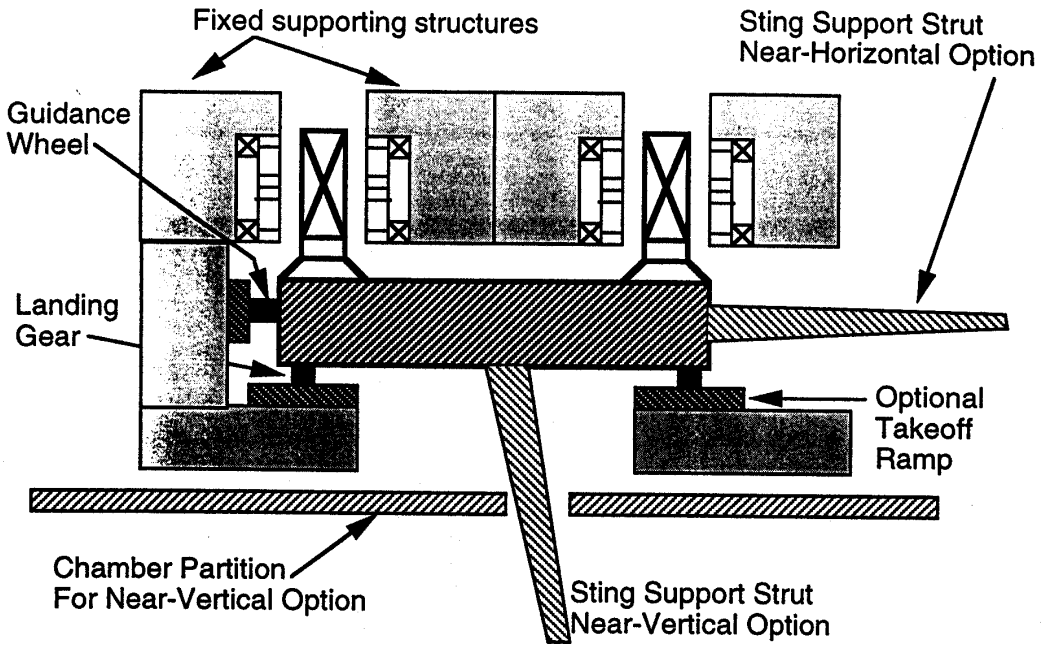

Figure 4.5 Inverted EDS system with double-sided LSM's. Only Left Side Shown

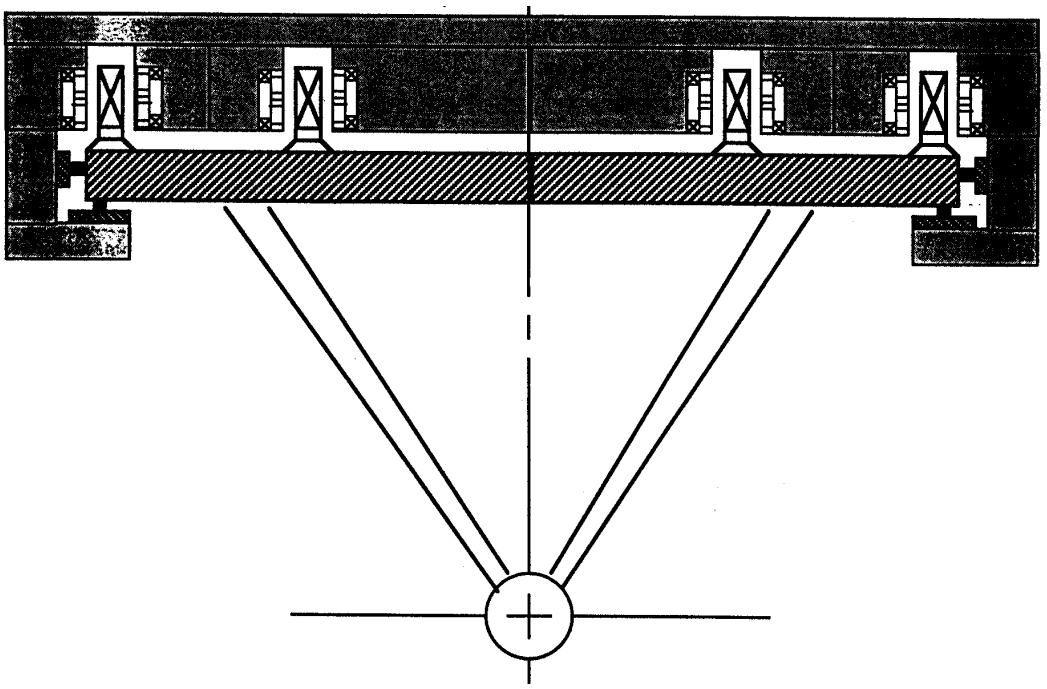

Figure 4.6 Inverted EDS System Using Wide Flat Cart With 4 double-sided LSM's and 2 Sting Struts.

equivalent of 16 LSM's, and could produce accelerations of the order of three g's. Although shown with two struts per cart, a single strut per cart would work if two carts were used. Hence such a configuration could be used with the forward cart option. Similar configurations would work with the EMS systems as well.

(3) Ability to meet motion control or stability requirements.

Iron-core SLIM: It is not likely that this option will meet the requirements without the addition of a separate suspension and motion control system.

Iron-core LSM: Given the modifications mentioned above to meet the force and moment requirements, this system is well suited to meeting the motion control and stability requirements as well. Since the EMS system already requires a feed-back control system to maintain a constant air gap, that system will be able to control the lift and guidance forces and torques. The control of the model attitude or pitch angle is now addressed: This system uses a small air gap (about 7 to 11 mm). Two important implications of this are, first, that guideway alignment tolerances are correspondingly small, and second, motion relative to the air gap length must be kept small. The nominal sensitivity of the air gap length to excitation current in the field windings is about 1 mm per 20% change in field excitation current. Therefore, control to within 0.5 mm (+/- 0.02 inch) requires control of the field current to +/- 10% - a level that is quite achievable. Consequently, a difference in air gap of 2 mm from the front to the rear of a 10 m-long cart constitutes a pitch angle of

$$+/- (\arctan 0.002\text{m}/10\text{m}) = +/- 0.011 \text{ degrees.}$$

This is substantially better than required for the wind tunnel application.
Hence the required pitch and other moment controls can readily be achieved with the same control system that controls the air gaps. The requisite response characteristics of the German Transrapid system, which is designed for speeds up to at least 134 m/s, appears to be more than adequate for the tunnel application.

Air-core LSM: The nominal sensitivity of the vertical displacement (relative to the null-flux position) to the lift force is 0.3 mm per 1% change in lift force. As noted above, a change in vertical displacement of 2 mm over a 10-m cart length corresponds to an attitude change of +/- 0.011 degrees. Normally, superconducting magnets are operated in the persistent current mode. That means, once charged, the magnets maintain their fields indefinitely so long as they are kept below the critical temperature, field strength, and current. Changes in lift force of the order of 1 to 5% can be readily achieved by three methods: (1) Add a control winding to the superconducting magnets that allows a change of up to about 5% of the main lift force. This approach was investigated and field tested by Coffey, et al, 1973.
(2) Coffey, 1997, suggested simply adding a few separate superconducting magnets and operating them in a controlled-current mode. This is permissible provided that the current excursions do not exceed the superconducting magnet design limits.

(3) Adjust the control angle of the LSM's to alter the ratio of the thrust to normal force and compensate for the small changes in thrust by adjustments in the applied voltage. This approach was field tested by Kolm and Thornton, 1972, and investigated theoretically by Greene, et al, 1974. These approaches will work quite well for small changes in the forces and moments. Finally, it should be noted that EDS-type systems tend to be under damped. However, experience to date has shown that passive damping plates such as the cryostat walls, seem to provide adequate damping.

(4) Ability to operate in planned environments. Temperature range = -250 to =100 F; Medium pressure = 1 to 5 atmospheres.

Iron-core SLIM, Iron-core LSM, Air-core LSM: At this stage, there do not appear to be any significant advantages of one system over the others with regard to this measure. It should be noted however that the reaction plates on the carts for the SLIM option will act as large heat sources. Furthermore, whereas steel will be used in close proximity to the magnets in the Iron-core options, only non-ferromagnetic materials are used close to the superconducting magnets.

(5) mount of energy that must be carried on board and/or transferred to carts.

Iron-core SLIM, Iron-core LSM, Air-core LSM: Roughly equal quantities of energy will be required on board for each of these candidate system designs. None of these designs require that the propulsion power be transferred on board.

(6) reedom to use forward or aft cart options.

Iron-core SLIM, Iron-core LSM, Air-core LSM: There appears to be no significant differences between the three main candidate designs. A design that mechanically connects two or more carts together is preferred from the point of view of motion control and system rigidity. The design shown in Figure 4.6 that uses four double-sided LSM's mounted on a single wide cart at the top with one strut connecting to the sting and a similar configuration at the bottom offers the greatest technical benefits. This option would utilize the forward cart option with chamber partitions. Such a design could utilize either the EMS or EDS system. However, the EDS system will require mechanical support at rest and for speeds below lift-off for both options. The EMS system will probably not require mechanical support but there may be some concern about over heating if the at rest condition is too long.

(7) Technical areas with significant uncertainty (potential "show stoppers")

Iron-core SLIM: Thermal management may be a show-stopper. The weight penalty associated with having to combine the SLIM with a separate lift and guidance system may be excessive. Control of the normal force components may not be easy.

Iron-core LSM: The necessity of having to design a system that produces substantially more thrust than lift may result in a relatively poorly performing system. Further analysis and some hardware development and testing effort may be required. It may be possible to develop an alternative EMS system with better force characteristics.

Air-core LSM: If it is found advantageous or necessary to increase the mmf of the superconducting magnets, then hardware development and testing may be required. Other than the Japanese, few have had the experience with designing and extensively field testing such magnets for transportation applications. Further detailed analysis will be required to optimize the design and placement of control magnets.

(8) Extent to which similar concepts have been developed and tested.

Iron-core SLIM: SLIM's have been designed for a number of transportation applications including one low-speed maglev system - the HSST, which is really a hybrid system similar to that suggested here. However, none of these system designs have used the SLIM to produce lift forces.

Iron-core LSM: The main use of this motor type has been with the German Transrapid system. As already mentioned, that application called for a lift force ten times larger than the thrust force. The DLSM option has not been used.

Air-core LSM: This system has been used in the Japanese maglev system and extensively test at Miyazaki and now at Yamanashi. It was also tested, during the early seventies, in both Erlangen, Germany, and at MIT by Kolm and his associates. The DLSM option has not been used, but some analysis has been performed.

(9) Need for additional analysis and/or hardware development and testing

Iron-core SLIM: This system will require a combination of SLIM or DLIM propulsion motors and some form of magnetic suspension system. Such a combination and its design requirements including operation at 106.7 m/s are sufficiently different from the HSST system (and any other application carried out to date) that some testing should be carried out before a full-scale system is constructed. A more detailed design study should be performed and a careful analysis of the forces, control forces, component masses and heat generated in the reaction plates is needed.

Iron-core LSM: A detailed design study should be carried out and a careful examination of the forces, currents, heat generated, and component masses is needed. Before proceeding, it should be determined that the required thrust levels can indeed be achieved. Preliminary experiments may be required to test the double-sided LSM concept suggested here.

Air-core LSM: This design choice comes the closest to existing designs as far as the main forces and currents are concerned. However, since the modifications needed to meet the motion control and moment compensation requirements have never been used in a real system before, they need to be carefully examined analytically and some experiments may be required if uncertainties in the calculations remain. A detailed design study should be carried out and an analytical investigation of the forces, magnet configurations, and component masses performed.

5. Conclusions

Work to date indicates the following preliminary conclusions:

(1) Three main candidate system designs have been identified, examined, and evaluated for the wind tunnel application. These are the iron-core SLIM (or DLIM) combined with an attractive-force suspension system; an iron-core LSM used in combination with an attractive-force suspension system; and an air-core LSM used in combination with a null-flux repulsive-force system utilizing superconducting magnets.
(2) Design concepts for each of these candidate systems suitable for wind tunnel applications have been illustrated. Both forward and aft cart options have been considered and analyzed in a preliminary manner.
(3) Preliminary calculations with a system model show that all three system designs can meet the propulsion requirements and result in wind tunnels of total length between 600 and 900 m.
(4) The SLIM by itself can not meet the force requirements, although when combined with a LSM can probably meet those requirements. The iron-core LSM when used with an EMS system can probably meet the force requirements although there is some uncertainty because the required thrust to lift ratio is at least one order of magnitude greater than normally called for in transportation applications. The system requirements are the closest to being met with present-day air-core LSM designs that are combined with a null-flux system. This design choice provides the greatest freedom to meet the thrust and lift force requirements with only modest extrapolation of existing designs.
(5) All design options examined require some modification of existing designs in order to meet the moment compensation and motion control requirements. In particular, compensating for the large static and dynamic pitching moments requires that the suspension systems be able to apply forces in both the up and down directions. Options for how to meet this requirementwere described.
(6) The SLIM design candidate utilizing a reaction plate consisting of laminated steel capped with an aluminum sheet offers promise. However, this approach has some significant uncertainties. The heat energy deposited in the reaction plate needs to be

carefully assessed and managed. The control of the SLIM in combination with the LSM requires careful balancing of forces and design parameters.

(7) The most promising configuration for an iron-core LSM in combination with an attractive force suspension system seems to be a design utilizing double-sided LSM's which provide vertical forces in either direction when called for. Such a design can provide the necessary moment compensation and attitude control as well as the required thrust.

(8) The most promising configuration of an air-core LSM used in combination with a repulsive force suspension system utilizes double-sided LSM's as well. In addition, the design of choice includes some control magnets that are offset from the null-flux position so as to provide greater stiffness of downward acting forces (the lift magnets do not have to be displaced by over 3 cm before the vertical force changes sign). The thrust can be made quite large without an accompanying excessively large lift force. This results from the strong magnetic fields associated with the superconducting magnets, the large volume of space that can be filled with the strong field, the absence of any ferromagnetic material, and the lack of tight spatial constraints (within practical limits) imposed on the stator windings.

Bibliography and References

Anagnostopoulos, G., J. E. Anderson, and F. L. Raposa, 1993, Maglev Performance Simulation, Proc. of the 13th Intern. Conf. on Magnetically Levitated Systems and Linear Drives, Argonne National Laboratory, May.

Atherton, D. L. and A.R. Eastham, 1977, Electrodynamic Suspension and Linear Synchronous Motor Propulsion for High Speed Guided Ground Transportation, Canadian Institute of Guided Ground Transport, Queen's University, report no. 77-13, Sept.

Atherton, D. and A. R. Eastham, 1974, Guidance of a High-Speed Vehicle With Electrodynamic Suspension, IEEE Transactions on Magnetics, Vol MAG 10, No. 3, Sept., pp. 398-401.

Cai, Y., S. S. Chen, T. M. Mulcahy, and D. M. Rote, 1992, Dynamic Stability of Maglev Systems, Argonne National Laboratory report no. ANL-92/21, April.

Cai, Y., D. M. Rote, T. M. Mulcahy, Z. Wang, S. S. Chen, and S. Zhu, Dynamic Stability of Repulsive Force Maglev Suspension Systems, Argonne National Laboratory report no. ANL-96/18, Nov.

Coffey, H.T., 1992, Preliminary Design for a Maglev Development Facility, Argonne National Laboratory, report no ANL/ESD-14, April.

Coffey, H. T., 1974, SRI Magnetic Suspension Studies for High-Speed Vehicles, Adv. in Cryogenic Engr., Vol. 19, pp. 137-153.

Coffey, H. T., J. C. Solinsky, J. D. Colton, and J. R. Woodbury, 1974, Dynamic Performance of the SRI Maglev Vehicle, IEEE Transactions on Magnetics, Vol MAG 10, No. 3, Sept., pp. 451-457.

Coffey, H. T. , 1997, Personal communication to D. M. Rote, Oct.

Eastham, A. R., G. E. Dawson,and L. W. Coathup, The Design and Operation of the Homopolar Linear Synchronous Motor for Linear Drive and for Integrated Suspension/Propulsion Applications, C397/84 © IMechE, pp. 95-103.

Eastham, J. F., M. J. Balchin, and D. Rodger, 1984, A Comparison of Some Propulsion Methods for Magnetically-Levitated Vehicles, C406/84 ©IMechE, pp. 111-118.

Eastham, J. F., M. J. Balchin, P. C. Coles, and D. Rodger, 1987, Comparison of Short Primary Linear Machines for High-Speed Maglev Vehicles, IEEE Transactions on Magnetics, Vol. MAG-23, No. 5, Sept., pp. 2338-2343.

Freeman, E. M. and D. A. Lowther, 1973, Normal Force in Single-Sided Linear Induction Motors, Proc. IEE, Vol. 120, No. 12, Dec.

Fujino, M.and T. Mizuma, Total Test Operation of HSST-100 and Planning Project in Nagoya, Proc. of the 14th Intern. Conf. on Magnetically Levitated Systems, VDE-Verlag GMBH, Berlin, Nov., pp. 129-134.

Furst, Rudiger, 1995, Design Elements and Quantitative Results of Synchronous Long-stator Linear Motors for High-speed Magnetic Trains Taking the Transrapid Test Facility in Emsland as an Example, Proc. of the 14th Intern. Conf. on Magnetically Levitated Systems, VDE-Verlag GMBH, Berlin, Nov., pp. 113-120.

Gibbon, M. A. and J. H. Parker, 1986, Operational Experience with a LIM-Drive Transit System, Proc. Intern. Conf. on Maglev and Linear Drives, Published by the IEEE, Catalog No. 86CH2276-4, May, pp.135-140.

Greene, A. H., W. J. Harrold, R. S. Kasevich, F. P. Morrison, and C. H. Tang, 1974, LSM Control of Maglev Vehicle Ride Quality, IEEE Transactions on Magnetics, Vol MAG 10, No. 3, Sept., pp. 431-434.

Hayes, W. F. and Tucker, 1984, Design Concept and Comparative Performance of an Electrodynamic Maglev Transportation System for the Toronto-Montreal Corridor of Canada, C400/84 ©IMechE, pp. 137-146.

He, J. L., H. T. Coffey, D. M. Rote, and Z. Wang, 1991, Publications on Maglev Technologies, Argonne National Laboratory Report No, ANL/ESD/TM-29, Dec.

He, J. L., D. M. Rote, and H. T. Coffey, 1992, Survey of Foreign Maglev Systems, Argonne National Laboratory Report No, ANL/ESD-17, July.

He, J. L., D. M. Rote, and H. T. Coffey, 1994, Study of Japanese Electrodynamic-Suspension Maglev Systems, Argonne National Laboratory Report No, ANL/ESD-20, April.

He, J. L., D. M. Rote, J. R. Hull, Y. Cai, Z. Wang, H. T. Coffey, and T. M. Mulcahy, 1996, Dual Keel Electrodynamic Maglev System, U.S. Patent No. 5,586,504, Issued Dec. 24, 1996.

Iwahana, T. T. Iketani, and T. Fujimoto, 1980, Characteristics of a Maglev Running on Aluminum Sheet Guideways, Quarterly Reports of the Railway Technical Research Institute of Japan, 21,4.

Iwasa, Y., M. O. Hoenig, and H. H. Kolm, 1974, Design of a Full-Scale Magneplane Vehicle, IEEE Transactions on Magnetics, Vol. MAG-9, No. 3, Sept., pp. 402-405.

Kolm, H. H. and R. D. Thornton, 1073, Electromagnetic Flight, Scientific American, Vol. 229, No. 4, Oct., pp.17-25.

Levi, E., 1973, Linear Synchronous Motors for High-Speed Ground Transportation, IEEE Transactions on Magnetics, Vol. MAG-9, No. 3, Sept., pp. 242-248.

Mahtani, J. L. and R. G. Rhodes, 1985, Experimental Studies of the Superconducting Split Track Maglev System, Proc. of the Intern. Conf. on Maglev Transport'85, Published by the Inst. of EE of Japan, pp. 199-205.

McLean, G. W., 1988, Review of Recent Progress in Linear Motors, IEE Proc., Vol. 135, Pt B, No. 6, Nov., pp. 380-416.

Morris, T., and K. Davey, 1996, Personal communication to D. M. Rote.

Murai, T., T. Fujimoto, and S. Fujiwara, 1995, Test Run of the Combined Propulsion, Levitation, and Guidance System in the EDS Maglev, Proc. of the 14th Intern. Conf. on Magnetically Levitated Systems, VDE-Verlag GMBH, Berlin, Nov., pp. 289-294.

Nasar, S. A., 1987, Handbook of Electric Machines, McGraw-Hill Book Co., New York.

NMI, 1993, Compendium of Executive Summaries from the Maglev System Concept Definition Final Reports, Dept. of Transportation report no. DOT/FRA/NMI-93/02, March.

Powell, J.R. and G. T. Danby, Electromagnetic Inductive Suspension and Stabilization System for a Ground Vehicle, U.S. Patent No. 3,470,828, Issued Oct. 7, 1969.

Rhodes, R. G., B. E. Mulhall, J. P. Howell, and E. Abel, 1974, The Wolfson Project, IEEE Transactions on Magnetics, Vol MAG 10, No. 3, Sept., pp. 398-401.

Rossing, T. D., R. Korte, and J. R. Hull, 1991, Effect of Guideway Discontinuities on Magnetic Levitation and Drag Forces, J. Appl. Phys., Vol. 70, pp. 6507-6509.

Sakamoto, T. and A. R. Eastham, 1991, Induced Currents and Forces for the Split-Guideway Electrodynamic Levitation System, Presented at the Intermag '91 Conference in Pittsburgh, June.

Thornton, R. D., 1993, Linear Synchronous Motor Design, Proc. of the 13th Intern. Conf. on Magnetically Levitated Systems and Linear Drives, Argonne National Laboratory, May, pp. 271-276.

U.S. Army Corps of Engrs., 1993, Maglev for the United States, prepared by the U.S. Army Engineer Div., Huntsville, Al., August.

U.S. Department of Transportation, Final Report on the National Maglev Initiative, DOT report no. DOT/FRA/NMI-93/03, Sept.

Wiescholek, U., D. Rogg, and W.J. Mayer, High-Speed Magnetic Levitation System Transrapid, Proc. of the 14th Intern. Conf. on Magnetically Levitated Systems, VDE-Verlag GMBH, Berlin, Nov., pp. 17-23.

Yamamura, S., 1972, Theory of Linear Motors, University of Tokyo Press, published in the United States by John Wiley and Sons, N.Y.

Appendix A

Sheet1

	A	B	C	D	E	F	G
1	**Wind Tunnel Maglev Model- Iron-Core LSM**				10/6/97		
2	Note: Integrating EOM can take max of 200 iterations. If more required, increase dim in						
3	Function Integrat(). Care must be taken to ensure Max. thrust exceeds all drag forces.						
4	Otherwise vmax may never be reached.						
5							
6	**Input Parameters**				**Output Parameters**		
7		**Symbol**	**Value**			**Symbol**	**Value**
8	**Motor Parameters**	**(units)**				**(units)**	
9	Suspension type		1		Frequency	f (Hz)	206.74
10	Motor length	D (m)	10		Stator cable dia.	D_c (m)	0.054
11	Pole pitch	p (m)	0.258		Slot length	S_l (m)	0.0598
12	Phase current	I (A)	6000		Pole face length	P_l (m)	0.0262
13					Satur. slot length	P_l^s (m)	0.0659
14	Nom. phase Voltage	V (volts)	5000		Slot depth	S_d (m)	0.066
15	Nom. load angle	γ_0	20		Max. thrust	$F_{max.}$ (kN)	1298.02
16	turn length	l (m)			Input Time step	Deltat (s)	0.1
17	Motor width	M_w (m)	0.5		No. of iterations		31
18	No. of phases	N_p	3		Accel. time	T_a (s)	3.1
19	No. of turns/pole/ph	N_t	1		Accel length	L_a (m)	170
20	No. of par. cables	N_c	1		Vfinal	V_f (m/s)	108.99
21	No. of motors	N_m	16		Net force @vmax	F_{vmax}(kN)	1228.4
22	Air gap flux density	B (T)	0.35		Initial accel	a (m/s^2)	35.78
23	Air gap length	Gap(m)	0.01		Final accel	a (m/s^2)	33.86
24	Pole face area/motor	A_p (m^2)	1.0136		Decel. length	L_d (m)	193
25	Stator Winding mater.	Al, Cu	Cu		Test length	L_{test} (m)	213
26	Design current density	D_{cd}(A/mm^2)	4		Total Length	L_{tot} (m)	577
27	Stator cond. cross sec.	SCCS($inch^2$)	2.325		Normal force	F_N (kN)	1715
28	Stator wind. cross sec.	SWCS($inch^2$)	3.0225		Min. lift needed	F_l (kN)	356
29	Stator Winding Dia.*	SCD (inch)	1.9617		Lift mag. mass	LM_m(kg)	22944
30	*Actual cond. size depends on winding &cable type				Rev. cart mass	C_m'(kg)	34416
31	Stranded cond. dia.	STCD(inch)	0.963		Max. payload	PL(kg)	1865
32	Reaction plate thick.	Thick(m)			Rev. lift needed	F_l'(kN)	515.6
33	**Loads**						
34	Cart + model wt	Wt (tons)	40				
35	Max. model aero drag	F_a (tons)	5				
36	Max. cart aero drag	F_c (tons)	2.5				
37	Mod aero constant	Cmod	3.9084				
38	Cart aero constant	Ccart	1.9542				
39							
40	**Wind Tunnel Parameters**						
41	Max. speed	V_{max} (ft/s)	350				
42	Acceleration	A_a (ft/s/s)					
43	Deceleration	A_d (g's)	3				
44	Test duration @ Vmax	T (s)	2				